MIAMI-DADE COUNTY
PRODUCT CONTROL SECTION
11805 SW 26 Street, Room 208
Miami, Florida 33175-2474
T (786) 315-2590 F (786) 315-2599
www.miamidade.gov/building

DEPARTMENT OF REGULATORY AND ECONOMIC RESOURCES (RER)
BOARD AND CODE ADMINISTRATION DIVISION

NOTICE OF ACCEPTANCE (NOA)

Loren Cook Company
2015 E. Dale Street
Springfield, MO 65803

SCOPE: This NOA is being issued under the applicable rules and regulations governing the use of construction materials. The documentation submitted has been reviewed and accepted by Miami-Dade County RER-Product Control Section to be used in Miami Dade County and other areas where allowed by the Authority Having Jurisdiction (AHJ).

This NOA shall not be valid after the expiration date stated below. The Miami-Dade County Product Control Section (In Miami Dade County) and/or the AHJ (in areas other than Miami Dade County) reserve the right to have this product or material tested for quality assurance purposes. If this product or material fails to perform in the accepted manner, the manufacturer will incur the expense of such testing and the AHJ may immediately revoke, modify, or suspend the use of such product or material within their jurisdiction. RER reserves the right to revoke this acceptance if it is determined by Miami-Dade County Product Control Section that this product or material fails to meet the requirements of the applicable building code.

This product is approved as described herein and has been designed to comply with the Florida Building Code, including the High Velocity Hurricane Zone.

DESCRIPTION: Model "ACE" Aluminum Rooftop Fan – L.M.I.

APPROVAL DOCUMENT: Drawing No. **SD080717-11**, titled "ACE Power Ventilator Hurricane Rated", sheet 1 through 11 of 11, dated 05/05/14, prepared by Loren Cook Company, signed and sealed by Jerry T. Miller, P.E. on 07/21/2023, bearing the Miami-Dade County Product Control Revision stamp with the Notice of Acceptance number and expiration date by the Miami-Dade County Product Control Section.

MISSILE IMPACT RATING: Large and Small Missile Impact Resistant

LABELING: Each unit shall bear a permanent label with the manufacturer's name or logo, manufacturing address, model number, the positive and negative design pressure rating, indicate impact rated if applicable, installation instruction drawing reference number, approval number (NOA), the applicable test standards, and the statement reading 'Miami-Dade County Product Control Approved' is to be located on the door's side track, bottom angle, or inner surface of a panel.

RENEWAL of this NOA shall be considered after a renewal application has been filed and there has been no change in the applicable building code negatively affecting the performance of this product.

TERMINATION of this NOA will occur after the expiration date or if there has been a revision or change in the materials, use, and/or manufacture of the product or process. Misuse of this NOA as an endorsement of any product, for sales, advertising or any other purposes shall automatically terminate this NOA. Failure to comply with any section of this NOA shall be cause for termination and removal of NOA.

ADVERTISEMENT: The NOA number preceded by the words Miami-Dade County, Florida, and followed by the expiration date may be displayed in advertising literature. If any portion of the NOA is displayed, then it shall be done in its entirety.

INSPECTION: A copy of this entire NOA shall be provided to the user by the manufacturer or its distributors and shall be available for inspection at the job site at the request of the Building Official.

This NOA **renews** and **revises NOA No. 21-0405.09** and consists of this page 1 and evidence pages E-1, and E-2, as well as approval document mentioned above.

The submitted documentation was reviewed by **Carlos M. Utrera, P.E.**

MIAMI-DADE COUNTY APPROVED

NOA No. 23-0821.05
Expiration Date: October 02, 2028
Approval Date: November 16, 2023

NOTICE OF ACCEPTANCE: EVIDENCE SUBMITTED

1. EVIDENCE SUBMITTED UNDER PREVIOUS NOA's

A. DRAWINGS ***(Submitted under NOA No. 16-1108.06)***

1. Drawing No. **SD080717-11**, titled "ACE Power Ventilator Hurricane Rated", sheets 1 through 11 of 11, dated 05/05/14, with revision E, prepared by manufacturer, signed and sealed by Bradley F. Skidmore, P.E.

B. TESTS

1. Test reports on: 1) Uniform Static Air Pressure Test, Loading per FBC TAS 202-94
   2) Large Missile Impact Test per FBC, TAS 201-94
   along with marked-up drawings and installation diagram of Model ACRU/VCR 300, rooftop ventilator with 48" high roof curb, prepared by Intertek-ATI, Test Report No. **G1591.01-801-18**, dated 09/22/16, signed and sealed by Tyler Westerling, P.E.
   (Submitted under NOA No. 16-1108.06)
2. Test reports on: 1) Uniform Static Air Pressure Test, Loading per FBC TAS 202-94
   2) Large Missile Impact Test per FBC, TAS 201-94
   along with marked-up drawings and installation diagram of Models ACE 195 and ACE 300, rooftop ventilators, prepared by Intertek- Architectural Testing, Inc., Test Report No. **D7025.01-801-18**, dated 08/11/14, signed and sealed by Shawn G. Collins, P.E.
   (Submitted under NOA No. 14-1218.05)
3. Test reports on: 1) Uniform Static Air Pressure Test, Loading per FBC TAS 202-94
   2) Large Missile Impact Test per FBC, TAS 201-94
   3) Cyclic Wind Pressure Loading per FBC, TAS 203-94
   along with marked-up drawings and installation diagram of a Model ACE B, metal roof vent, prepared by Architectural Testing, Inc., Test Report No. **78029.01-801-18**, dated 03/03/08, signed and sealed by Jeffrey T. Kaminski, P.E.
   (Submitted under NOA No. 08-0424.03)

C. CALCULATIONS ***(Submitted under NOA No. 14-1218.05)***

1. Wind loads and anchor calculations dated 05/05/14, prepared by manufacturer, signed and sealed by Bradley F. Skidmore, P.E.

D. QUALITY ASSURANCE

1. Miami-Dade Department of Regulatory and Economic Resources (RER).

Carlos M. Utrera, P.E.
Product Control Examiner
NOA No. 23-0821.05
Expiration Date: October 02, 2028
Approval Date: November 16, 2023

NOTICE OF ACCEPTANCE: EVIDENCE SUBMITTED

E. MATERIAL CERTIFICATIONS

1. None.

F. STATEMENTS ***(Submitted under NOA No. 18-0614.04)***

1. Statement letter of conformance, complying with **FBC 6th Edition (2017)** dated 06/08/18, issued by manufacturer, signed and sealed by Bradley F. Skidmore, P.E.
2. Statement letter of no financial interest dated 12/10/14, issued by manufacturer, signed and sealed by Bradley F. Skidmore, P.E. ***(Submitted under NOA No. 14-1218.05)***

2. EVIDENCE SUBMITTED UNDER NOA # 21-0405.09 AND NEW

A. DRAWINGS

1. Drawing No. **SD080717-11**, titled "ACE Power Ventilator Hurricane Rated", sheet 1 through 11 of 11, dated 05/05/14, prepared by Loren Cook Company, signed and sealed by Jerry T. Miller, P.E. on 07/21/2023.

B. TESTS

1. None.

C. CALCULATIONS

1. None.

D. QUALITY ASSURANCE

1. Miami-Dade Department of Regulatory and Economic Resources (RER).

E. MATERIAL CERTIFICATIONS

1. None.

F. STATEMENTS

1. Statement letter of conformance, complying with **FBC 8th Edition (2023)** dated 07/28/2023, issued by Miller Engineering, signed and sealed by Jerry T. Miller, P.E.
2. Statement letter of no financial interest, dated 07/21/2023, issued by Miller Engineering, signed and sealed by Jerry T. Miller, P.E.
3. Statement letter of conformance, complying with **FBC 7th Edition (2020)** dated March 19, 2021, issued by manufacturer, signed and sealed by Bradley F. Skidmore, P. E.

Carlos M. Utrera, P.E.
Product Control Examiner
NOA No. 23-0821.05
Expiration Date: October 02, 2028
Approval Date: November 16, 2023

300	BELT/DIRECT	6–15/16	52–1/2	48–3/4	3	36	270
270	BELT/DIRECT	6–1/8	47–1/2	40–1/16	3	36	230
245	BELT/DIRECT	5–11/16	47–1/2	39–5/8	3	30	210
225	BELT/DIRECT	4–3/4	43–7/16	37–1/16	3	30	190
210	BELT/DIRECT	4–3/4	43–7/16	37–1/16	3	30	170
195	BELT/DIRECT	4–5/8	37–13/16	34–15/16	3	30	130
180	BELT/DIRECT	4–3/8	37–13/16	34–11/16	3	30	120
165	BELT/DIRECT	3–7/8	32–15/16	29–7/16	2	24	100
150	BELT/DIRECT	3–1/2	32–15/16	29–1/16	2	24	95
135	BELT/DIRECT	2–7/16	28–7/16	27–1/4	2	20	80
120	BELT/DIRECT	2–1/8	28–7/16	26–15/16	2	20	75
60–100	BELT	2–7/8	23–9/16	21–1/8	2	18	50
100	DIRECT	2–1/2	18–3/4	16–13/16	2	18	30
90	DIRECT	2–1/2	18–3/4	16–13/16	2	18	28
70	DIRECT	1–3/4	13–5/8	13–13/16	2	18	20
UNIT	DRIVE	DIM	DIM	DIM	DIM	T	NOMINAL
SIZE	TYPE	A	B	C	D	SQUARE	WEIGHT

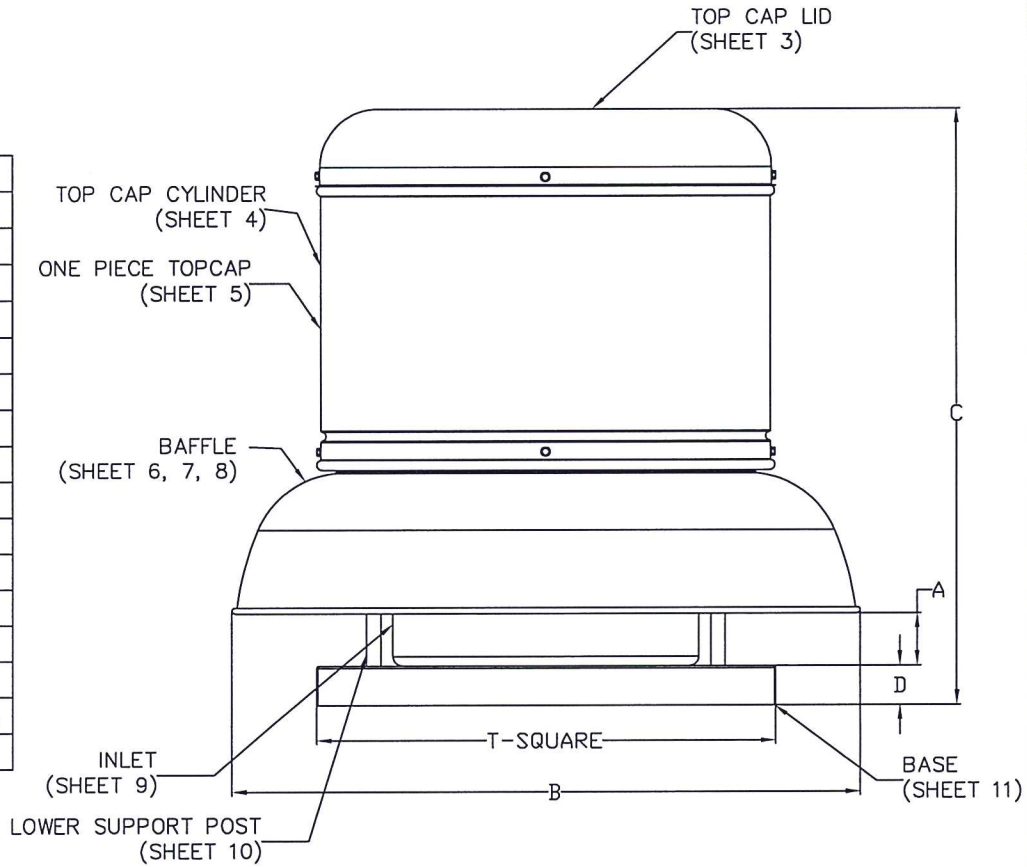

PRODUCT REVISED
as complying with the Florida Building Code
NOA-No. 23-0821.05
Expiration Date 10/02/2028
By
Miami-Dade Product Control

NOTES: DESIGN PRESSURE +150PSF / −150PSF
IMPACT RATING: LARGE MISSILE IMPACT RESISTANT
DESIGN TESTING AND INSTALLATION CONFORMS TO FLORIDA BUILDING CODE
ALL DIMENSIONS IN INCHES/ALL WEIGHTS IN POUNDS

JERRY TRAVIS MILLER- ENGINEER
FLORIDA LICENSE #89925
FLORIDA STATE CERTIFICATE
OF AUTHORITY #RY34366

JERRY TRAVIS MILLER
LICENSED
No 89925
STATE OF
FLORIDA
PROFESSIONAL ENGINEER
7/21/23

MAT'L	–	
DRAWN	BFS	05/05/14
DESIGNER	BFS	SHEET 1 OF 11

DO NOT SCALE DRAWING
TOLERANCES UNLESS OTHERWISE NOTED

DECIMAL	FRACTIONAL
.XX=±.063"	≤12"=±1/16"
.XXX=±.010"	>12" THRU 96"=±1/8"
.XXXX=±.001"	>96" THRU 144"=±1/4"
	>144"=±3/8"
ANGULAR ±2°	(NC)=NO INSPECTION REQ'D

LOREN COOK CO.
MANUFACTURERS OF AIR MOVING EQUIPMENT
SPRINGFIELD, MISSOURI

ACE POWER VENTILATOR
HURRICANE RATED
–

SIZE	DRAWING NO.	REV.
B	SD080717–11	E

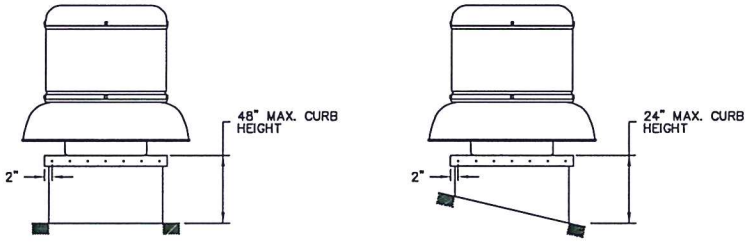

ATTACHMENT OF CURB TO ROOF STRUCTURE

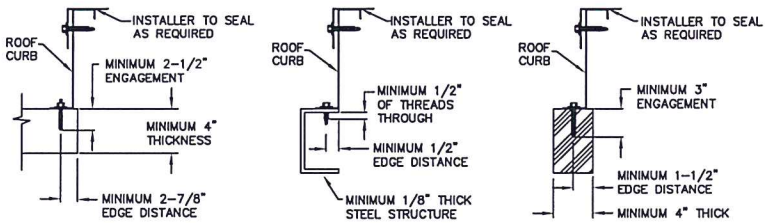

CONCRETE ROOF DECK	STEEL ROOF STRUCTURE	WOOD ROOF STRUCTURE
MINIMUM 2500PSI CONCRETE	A36 STEEL STRUCTURE MINIMUM Fy=36KSI	MIN. 4" NOMINAL THICK WOOD MIN SG = .42

FASTENER TABLE		
UNIT SIZE	MINIMUM NUMBER OF FASTENERS PER SIDE TO ATTACH UNIT TO CURB	MINIMUM NUMBER OF FASTENERS PER SIDE TO ATTACH CURB TO ROOF STRUCTURE
60	5	5
70	5	5
80	5	5
90	5	5
100	5	5
120	5	6
135	5	6
150	6	7
165	6	7
180	8	8
195	8	8
210	8	9
225	8	9
245	8	10
270	9	10
300	9	14

PRODUCT REVISED
as complying with the Florida Building Code
NOA-No. 23-0821.05
Expiration Date 10/02/2028
By
Miami-Dade Product Control

NOTES:

1) ACE POWER VENTILATOR AS REFERRED TO HEREIN REFERS TO ALL LOREN COOK MODEL ACE POWER VENTILATORS INCLUDING BOTH DIRECT DRIVE AND BELT DRIVE UNITS WHICH ARE CONSTRUCTED WITH THE SAME OUTER HOUSING COMPONENTS.

2) THIS APPROVAL IS FOR THE STRUCTURAL CAPACITY OF THE EXTERIOR HOUSING ONLY, IT DOES NOT INCLUDE ANY INTERIOR MECHANISM OR ELECTRICAL PART.

3) THIS PRODUCT HAS NOT BEEN TESTED FOR WATER PENETRATION ACCORDING TO FLORIDA BUILDING CODE TAS 100(A), WIND DRIVEN RAIN TEST. IT CANNOT BE INSTALLED WITHIN THE RIDGE AREA FBC 1523.6.5.2.13

4) UNIT IS TO INCLUDE A CURB CAP BASE TO FACILITATE MOUNTING OF THE UNIT TO A CURB. THE CURB WILL BE ADEQUATELY ATTACHED TO THE BUILDING STRUCTURE TO SUSTAIN ALL FORCES WHICH MAY BE PRODUCED BY THE PRESCRIBED ENVIROMENTAL FORCES EXERTED ON THE FAN AND CURB. THE CURB MUST BE ATTACHED TO A STRUCTURAL MEMBER OF THE BUILDING.

   CONCRETE DECK: CURB IS TO BE ATTACHED WITH WEDGE TYPE CONCRETE ANCHOR – MINIMUM 3/8" DIAMETER CARBON STEEL – HILTI KWIK BOLT 3 OR EQUAL. MINIMUM 2-1/2" OF ENGAGEMENT IN 2000 PSI MINIMUM CONCRETE. MINIMUM DECK THICKNESS IS 4". ANCHORS ARE TO BE EQUALLY SPACED. SEE TABLE FOR MINIMUM QUANTITY OF ANCHORS REQUIRED PER CURB SIDE.

   STEEL ROOF STRUCTURE: CURB IS TO BE ATTACHED WITH SELF-DRILLING STEEL SCREW OF MINIMUM NOMINAL SIZE OF #12, AND SCREW SHALL PASS THROUGH STEEL STRUCTURE AT LEAST 1/2". THE SCREW MUST BE AT LEAST 1/2" FROM MATERIAL EDGE. SEE TABLE FOR MINIMUM QUANTITY OF SCREWS REQUIRED PER CURB SIDE.

   WOOD ROOF STRUCTURE: CURB IS TO BE ATTACHED WITH STEEL LAG BOLTS NOMINAL SIZE OF 5/16" DIAMETER OR LARGER. WOOD IS TO BE 4" NOMINAL SIZE OR GREATER. THE BOLT SHALL HAVE A MINIMUM OF 3" OF THREAD ENGAGEMENT AND SHALL BE AT LEAST 1-1/2" FROM MATERIAL EDGE. SEE TABLE FOR MINIMUM QUANTITY OF BOLTS REQUIRED PER CURB SIDE.

5) THE CURB SHALL BE CONSTRUCTED OF G-90 GALVANIZED STEEL OR 3003-H24 ALUMINUM OR STAINLESS STEEL. THE CURB MATERIAL THICKNESS SHALL BE 18 GA (.0470") OR GREATER. THE CURB HEIGHT SHALL NOT EXCEED 48".

6) THE ACE POWER VENTILATOR SHALL BE ATTACHED TO THE CURB WITH ONE OF THE FOLLOWING METHODS INSTALLED ON ALL FOUR SIDES OF THE CURB CAP OR THROUGH THE USE OF THE ACCESSORY HINGED BASE. THE FASTENERS SHALL BE 2" FROM EACH CORNER OF THE FAN BASE. THE DISTANCE BETWEEN FASTENERS SHALL BE 4" OR LESS. THE QUANTITY OF FASTENERS INTO EACH CURB SIDE SHALL EQUAL OR EXCEED THE QUANTITY SHOWN IN THE FASTENER TABLE (AT LEFT).

   A) #12 X 2" HEX WASHER HEAD SELF-DRILLING SCREW
   B) ALTERNATE FASTENER – .25" HEX HEAD BOLT AND WASHER WITH COMPANION NUT INSTALLED ON THE INTERIOR OF THE CURB.

7) ALL FASTENERS ARE TO BE HIGH QUALITY CORROSION RESISTANT STEEL OR STAINLESS STEEL.

8) ANY GAP BETWEEN THE CURB AND CURB CAP SHALL BE FILLED BY THE INSTALLING CONTRACTOR WITH A SUITABLE CORROSION RESISTANT MATERIAL THAT ALLOWS THE FASTENERS TO BE INSTALLED WITHOUT CAUSING EXCESSIVE DISTORTION OF THE UNIT FLANGES.

9) THE INSTALLER IS RESPONSIBLE FOR CHECKING THAT ALL FASTENERS ARE PROPERLY INSTALLED AND ALL ACCESS PANELS ARE IN PLACE BEFORE PUTTING THE UNIT INTO SERVICE.

10) ALL FASTENERS AND ACCESS PANELS MUST BE PROPERLY INSTALLED AFTER MAINTENANCE OPERATIONS FOR UNIT TO MAINTAIN CODE COMPLIANCE.

JERRY TRAVIS MILLER- ENGINEER
FLORIDA LICENSE #89925
FLORIDA STATE CERTIFICATE OF AUTHORITY #RY34386

JERRY TRAVIS MILLER LICENSED No 89925 STATE OF FLORIDA PROFESSIONAL ENGINEER
7/21/23

MAT'L	–	
DRAWN	BFS	05/05/14
DESIGNER	BFS	SHEET 2 OF 11

DO NOT SCALE DRAWING
TOLERANCES UNLESS OTHERWISE NOTED

DECIMAL	FRACTIONAL
.XX=±.063"	≤12"=±1/16"
.XXX=±.010"	>12" THRU 96"=±1/8"
.XXXX=±.001"	>96" THRU 144"=±1/4"
ANGULAR ±2°	>144"=±3/8"

(NC)=NO INSPECTION REQ'D

LOREN COOK CO.
MANUFACTURERS OF AIR MOVING EQUIPMENT
SPRINGFIELD, MISSOURI

ACE POWER VENTILATOR
HURRICANE RATED
–

SIZE	DRAWING NO.	REV.
B	SD080717-11	E

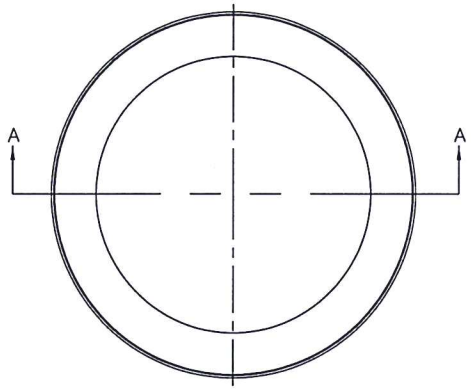

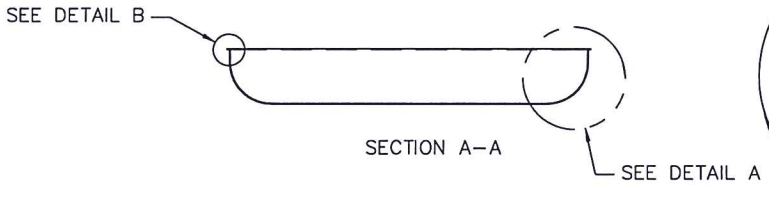

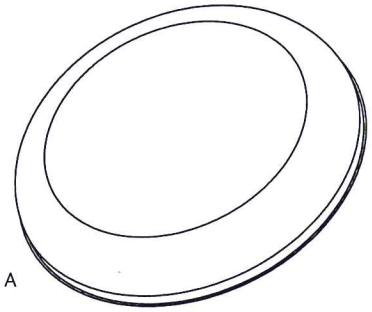

300	39–7/32	0.063
270	35–23/32	0.063
245	32–23/32	0.063
210–225	29–23/32	0.063
180–195	25–31/32	0.050
150–165	23–21/32	0.050
120–135	20–7/32	0.050
60–100	16–19/32	0.050
UNIT	A	MATERIAL
SIZE	DIM	THICKNESS

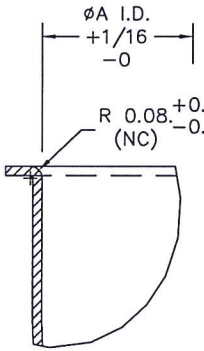

DETAIL B
SCALE 2.0

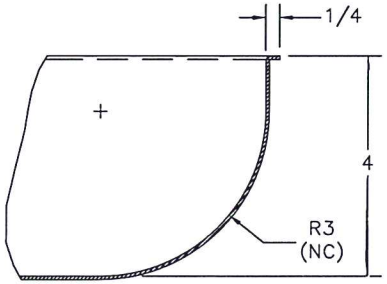

DETAIL A
SCALE 0.750

PRODUCT REVISED
as complying with the Florida Building Code
NOA-No. 23-0821.05
Expiration Date 10/02/2028
By
Miami-Dade Product Control

ALUMINUM: SY MIN=17KSI

JERRY TRAVIS MILLER- ENGINEER
FLORIDA LICENSE #89925
FLORIDA STATE CERTIFICATE
OF AUTHORITY #RY34386

JERRY TRAVIS MILLER
No 89925
STATE OF FLORIDA
PROFESSIONAL ENGINEER
7/21/23

MAT'L	3003 H14 ALUM	
DRAWN	BFS	05/05/14
DESIGNER	BFS	SHEET 3 OF 11

DO NOT SCALE DRAWING
TOLERANCES UNLESS OTHERWISE NOTED

DECIMAL	FRACTIONAL
.XX=±.063"	≤12"=±1/16"
.XXX=±.010"	>12" THRU 96"=±1/8"
.XXXX=±.001"	>96" THRU 144"=±1/4"
ANGULAR ±2°	>144"=±3/8"
	(NC)=NO INSPECTION REQ'D

LOREN COOK CO.
MANUFACTURERS OF AIR MOVING EQUIPMENT
SPRINGFIELD, MISSOURI

ACE POWER VENTILATOR
HURRICANE RATED

SIZE	DRAWING NO.	REV.
B	SD080717–11	E

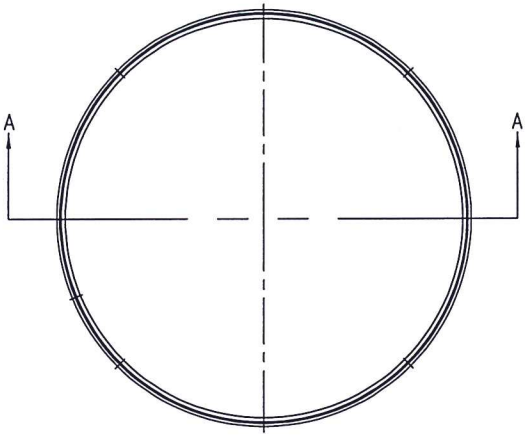

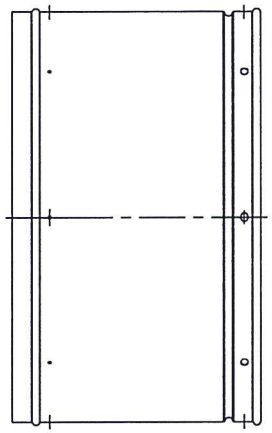

300	22	39–1/32	0.050
270	16–1/4	35–17/32	0.040
245	16–1/4	32–17/32	0.040
210–225	16–1/4	29–17/32	0.040
120–135	13	20–1/32	0.040
60–100 BELT	8–1/2	16–13/32	0.040
UNIT	A	B	THICKNESS
SIZE	DIM	DIM	MATERIAL

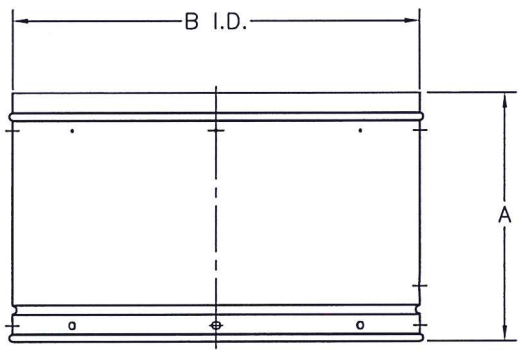

SECTION A–A

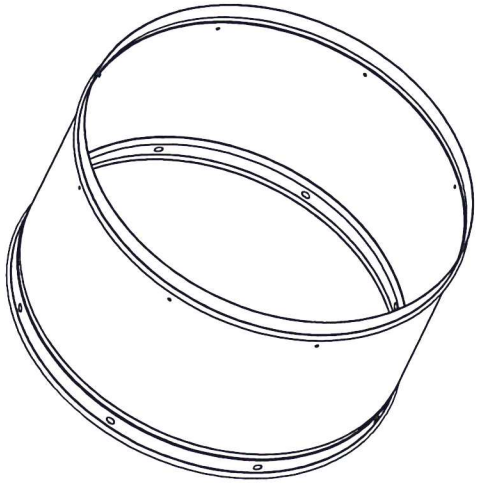

ALUMINUM: SY MIN=17KSI

PRODUCT REVISED
as complying with the Florida Building Code
NOA-No. 23-0821.05
Expiration Date 10/02/2028
By
Miami-Dade Product Control

JERRY TRAVIS MILLER- ENGINEER
FLORIDA LICENSE #89925
FLORIDA STATE CERTIFICATE
OF AUTHORITY #RY34386

JERRY TRAVIS MILLER
LICENSE
No 89925
STATE OF
FLORIDA
PROFESSIONAL ENGINEER
7/21/23

MAT'L	3003–H14 ALUM	
DRAWN	BFS	05/05/14
DESIGNER	BFS	SHEET 4 OF 11

DO NOT SCALE DRAWING
TOLERANCES UNLESS OTHERWISE NOTED

DECIMAL	FRACTIONAL
.XX=±.063"	≤12"=±1/16"
.XXX=±.010"	>12" THRU 96"=±1/8"
.XXXX=±.001"	>96" THRU 144"=±1/4"
ANGULAR ±2°	>144"=±3/8"
	(NC)=NO INSPECTION REQ'D

LOREN COOK CO.®
MANUFACTURERS OF AIR MOVING EQUIPMENT
SPRINGFIELD, MISSOURI

ACE POWER VENTILATOR
HURRICANE RATED
—

SIZE	DRAWING NO.	REV.
B	SD080717–11	E

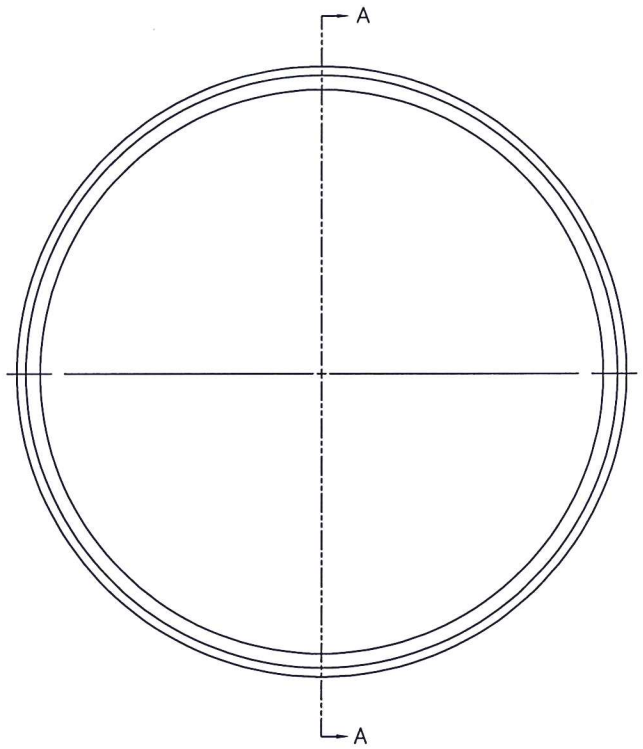

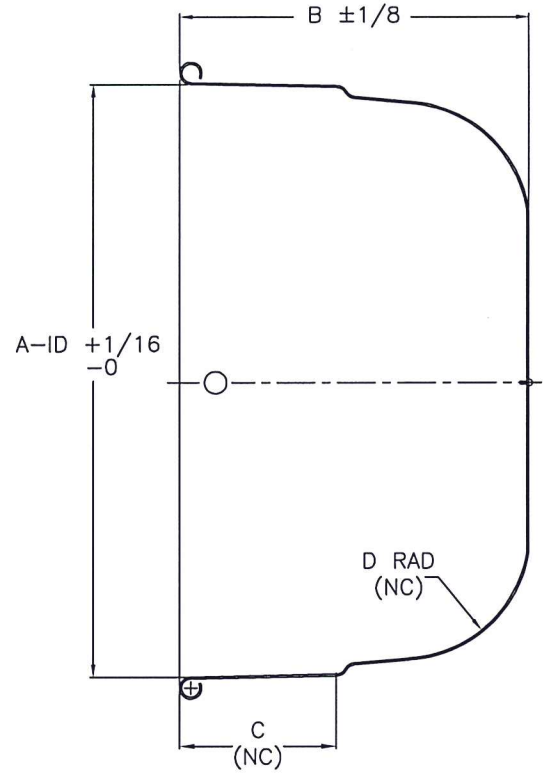

SECTION A–A

90–100 EXTRA DEEP	13–7/16	10	3–9/16	2–7/16
90–100	13–7/16	7–3/4	3–9/16	2–7/16
70 EXTRA DEEP	10–5/8	7–1/2	3–1/4	1–7/8
70	10–5/8	6–1/2	3–1/4	1–7/8
UNIT	A	B	C	D
SIZE	DIM	DIM	DIM	DIM
DIRECT DRIVE				

PRODUCT REVISED
as complying with the Florida Building Code
NOA-No. 23-0821.05
Expiration Date 10/02/2028
By
Miami-Dade Product Control

JERRY TRAVIS MILLER- ENGINEER
FLORIDA LICENSE #89925
FLORIDA STATE CERTIFICATE
OF AUTHORITY #RY34386

JERRY TRAVIS MILLER
No 89925
STATE OF
FLORIDA
PROFESSIONAL ENGINEER
7/21/23

ALUMINUM: SY MIN=17KSI

MAT'L	1100–0 ALUM .064 THICK	
DRAWN	BFS	05/05/14
DESIGNER	BFS	SHEET 5 OF 11

DO NOT SCALE DRAWING

TOLERANCES UNLESS OTHERWISE NOTED

DECIMAL	FRACTIONAL
.XX=±.063"	≤12"=±1/16"
.XXX=±.010"	>12" THRU 96"=±1/8"
.XXXX=±.001"	>96" THRU 144"=±1/4"
ANGULAR ±2°	>144"=±3/8"
	(NC)=NO INSPECTION REQ'D

LOREN COOK CO.
MANUFACTURERS OF AIR MOVING EQUIPMENT
SPRINGFIELD, MISSOURI

ACE POWER VENTILATOR
HURRICANE RATED
–

SIZE	DRAWING NO.	REV.
B	SD080717–11	E

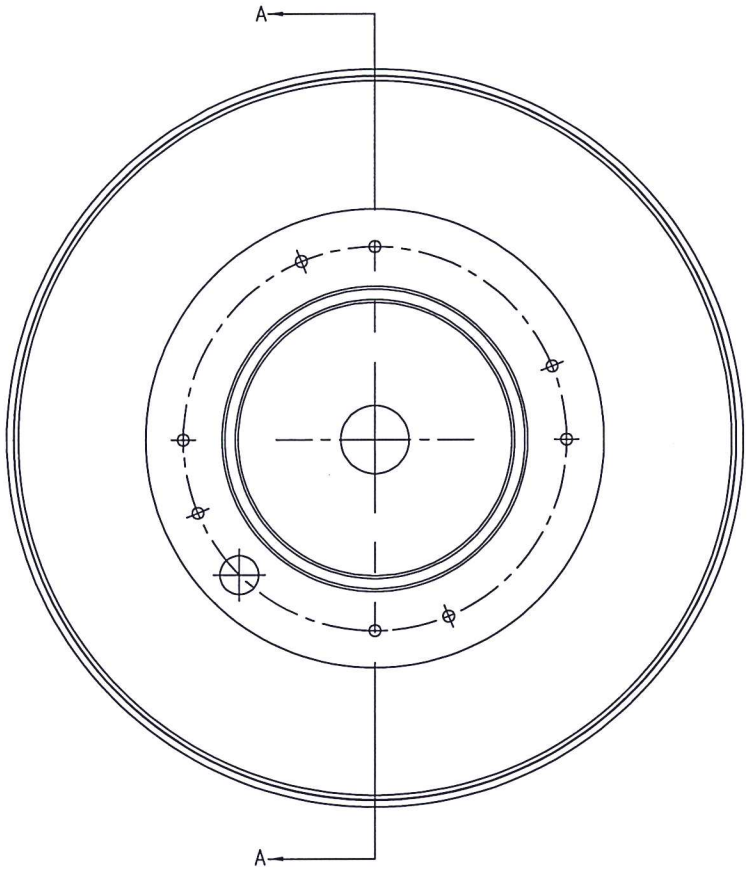

60-100 BAFFLE

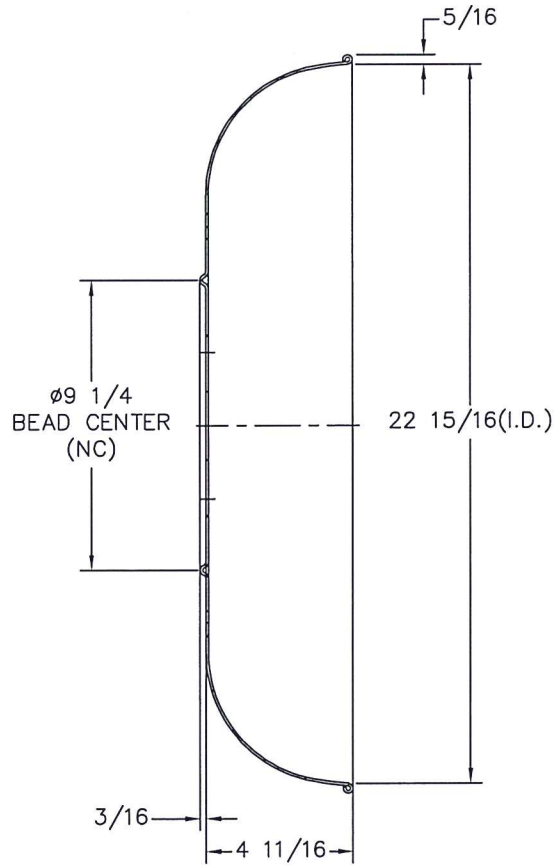

SECTION A-A

ALUMINUM: SY MAX=17KSI

PRODUCT REVISED
as complying with the Florida Building Code
NOA-No. 23-0821.05
Expiration Date 10/02/2028
By
Miami-Dade Product Control

JERRY TRAVIS MILLER- ENGINEER
FLORIDA LICENSE #89925
FLORIDA STATE CERTIFICATE
OF AUTHORITY #RY31386

JERRY TRAVIS MILLER
No 89925
STATE OF
FLORIDA
PROFESSIONAL ENGINEER
7/21/23

MAT'L	.08 THICK 3003-H14 ALUM	
DRAWN	BFS	05/05/14
DESIGNER	BFS	SHEET 6 OF 11

DO NOT SCALE DRAWING

TOLERANCES UNLESS OTHERWISE NOTED

DECIMAL	FRACTIONAL
.XX=±.063"	≤12"=±1/16"
.XXX=±.010"	>12" THRU 96"=±1/8"
.XXXX=±.001"	>96" THRU 144"=±1/4"
ANGULAR ±2°	>144"=±3/8"
	(NC)=NO INSPECTION REQ'D

LOREN COOK CO.®
MANUFACTURERS OF AIR MOVING EQUIPMENT
SPRINGFIELD, MISSOURI

ACE POWER VENTILATOR
HURRICANE RATED

SIZE	DRAWING NO.	REV.
B	SD080717-11	E

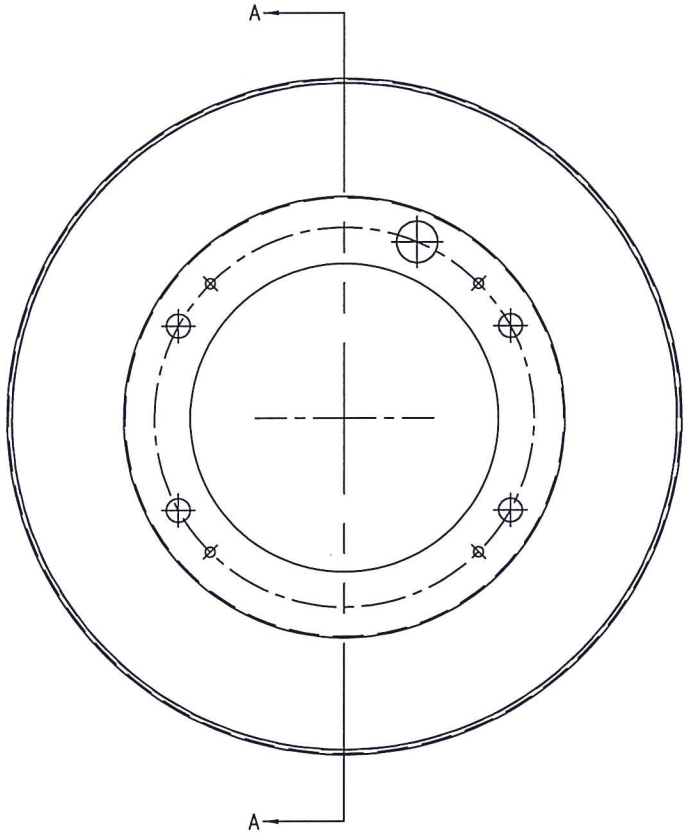

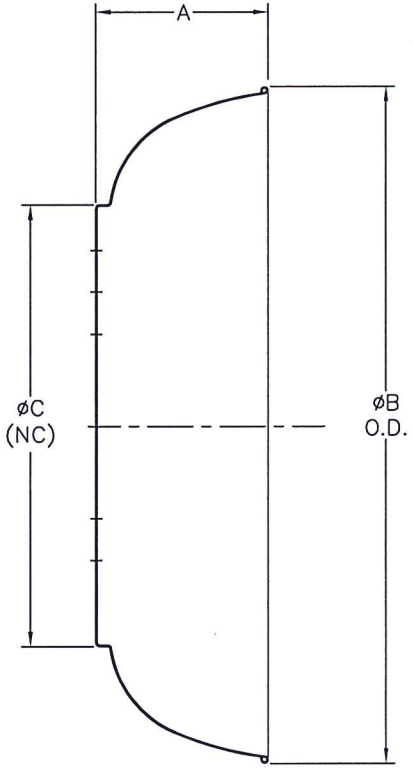

SECTION A–A

180–195	8 1/2	37 11/16	25 3/8
150–165	8	32 7/8	21 7/8
120–135	7 1/4	28 7/16	18 5/8
UNIT	A	B	C
SIZE	DIM	DIM	DIM

PRODUCT REVISED
as complying with the Florida Building Code
NOA–No. 23–0821.05
Expiration Date 10/02/2028
By
Miami–Dade Product Control

JERRY TRAVIS MILLER- ENGINEER
FLORIDA LICENSE #89925
FLORIDA STATE CERTIFICATE
OF AUTHORITY #RY34386

JERRY TRAVIS MILLER
No 89925
STATE OF
FLORIDA
PROFESSIONAL ENGINEER
7/7/23

ALUMINUM: SY MIN=17KSI

MAT'L	0.064 THICK 1100–0 ALUM	
DRAWN	BFS	05/05/14
DESIGNER	BFS	SHEET 7 OF 11

DO NOT SCALE DRAWING

TOLERANCES UNLESS OTHERWISE NOTED

DECIMAL	FRACTIONAL
.XX=±.063"	≤12"=±1/16"
.XXX=±.010"	>12" THRU 96"=±1/8"
.XXXX=±.001"	>96" THRU 144"=±1/4"
ANGULAR ±2'	>144"=±3/8"
	(NC)=NO INSPECTION REQ'D

LOREN COOK CO.
MANUFACTURERS OF AIR MOVING EQUIPMENT
SPRINGFIELD, MISSOURI

ACE POWER VENTILATOR
HURRICANE RATED

SIZE	DRAWING NO.	REV.
B	SD080717–11	E

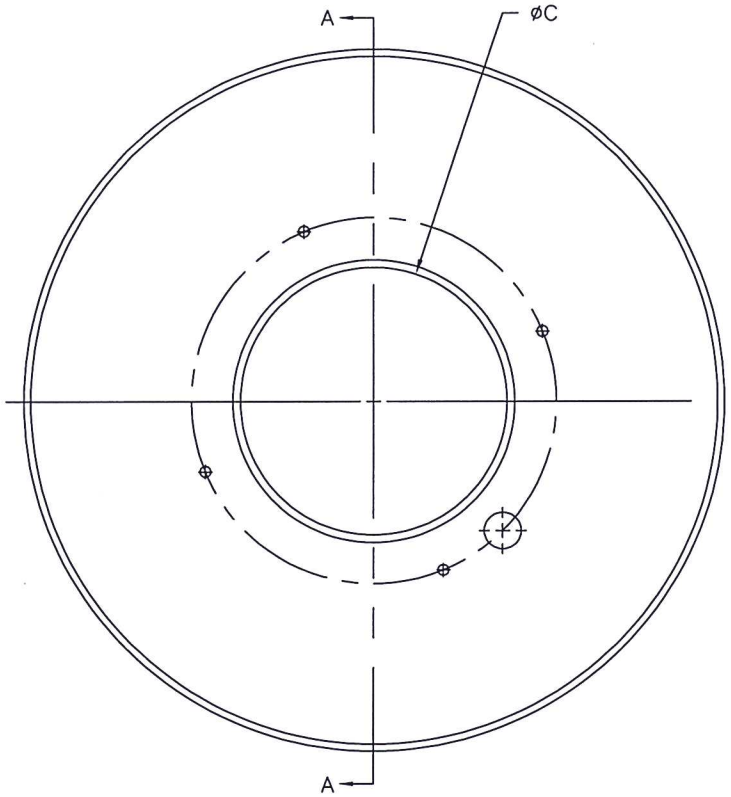

TOP: BAFFLE

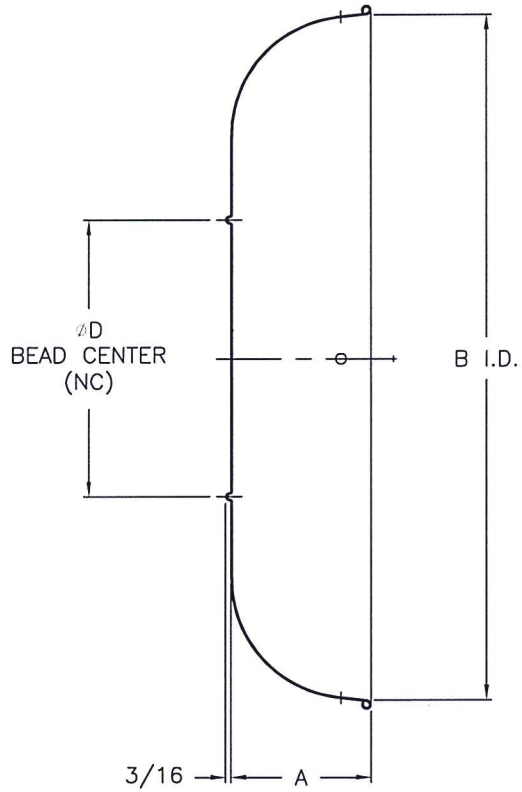

SECTION A–A

300	14	52	31–3/8	32
270	11–1/2	47	28–3/8	29
245	11–1/2	47	25–3/8	26
210–225	10–1/4	43	23–1/8	24
UNIT	DIM	DIM	DIM	DIM
SIZE	A	B	C	D

PRODUCT REVISED
as complying with the Florida Building Code
NOA-No. 23-0821.05
Expiration Date 10/02/2028
By
Miami-Dade Product Control

JERRY TRAVIS MILLER- ENGINEER
FLORIDA LICENSE #89925
FLORIDA STATE CERTIFICATE
OF AUTHORITY #RY34398
JERRY TRAVIS MILLER
No 89925
STATE OF
FLORIDA
PROFESSIONAL ENGINEER
7/21/23

ALUMINUM: SY MIN=17KSI

MAT'L	1100–0 ALUM 0.080 THICK	
DRAWN	BFS	05/05/14
DESIGNER	BFS	SHEET 8 OF 11

DO NOT SCALE DRAWING
TOLERANCES UNLESS OTHERWISE NOTED

DECIMAL	FRACTIONAL
.XX=±.063"	≤12"=±1/16"
.XXX=±.010"	>12" THRU 96"=±1/8"
.XXXX=±.001"	>96" THRU 144"=±1/4"
	>144"=±3/8"
ANGULAR ±2°	(NC)=NO INSPECTION REQ'D

LOREN COOK CO.
MANUFACTURERS OF AIR MOVING EQUIPMENT
SPRINGFIELD, MISSOURI

ACE POWER VENTILATOR
HURRICANE RATED

SIZE	DRAWING NO.	REV.
B	SD080717–11	E

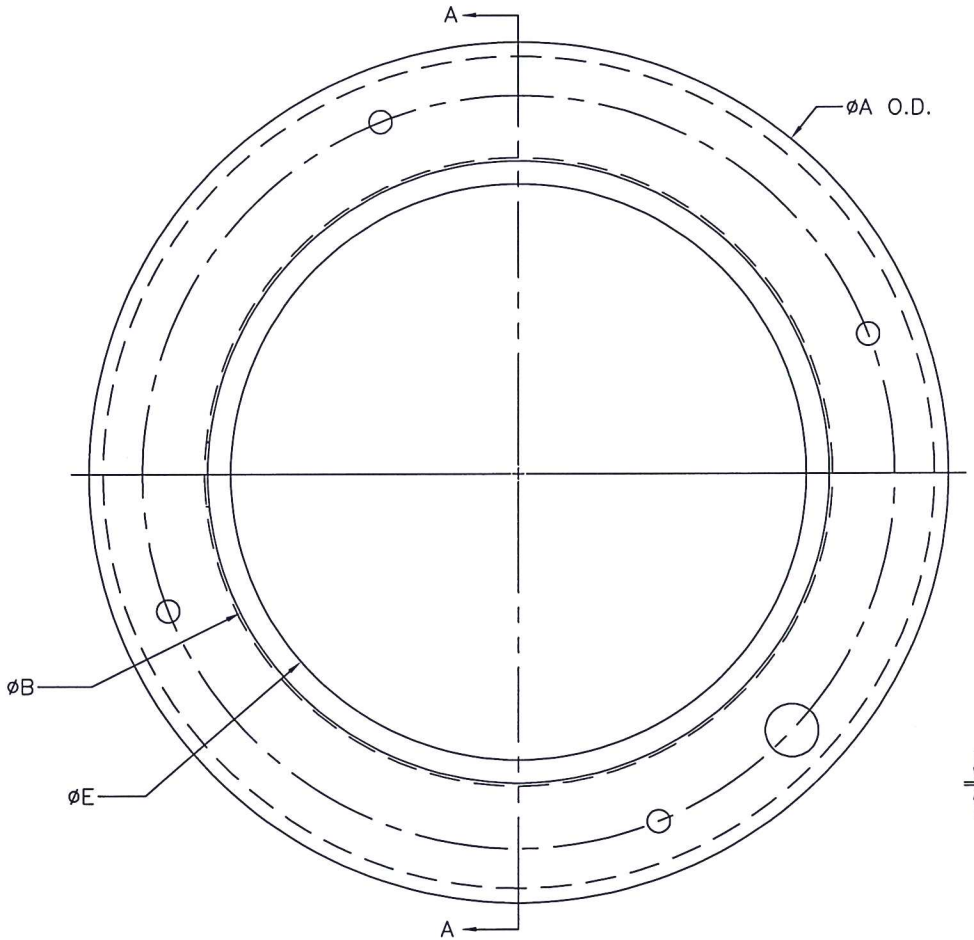

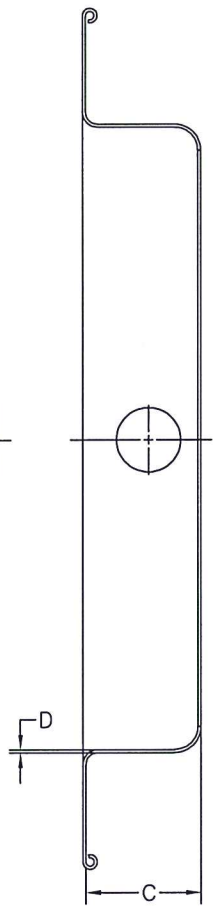

SECTION A–A

270	33–5/8	28–1/2	6–3/8	0.080	27
245	30–5/8	25–1/2	6–3/8	0.080	24
210–225	28–5/8	23–1/2	5–1/8	0.080	22
180–195	25–1/8	19	4–3/4	0.063	18–3/16
150–165	22–1/8	16	3–3/8	0.063	15–3/8
120–135	18–1/8	13	2–1/2	0.063	12–1/8
60–100	14	10–1/8	2–23/32	0.063	9–3/8
UNIT	A	B	C	D	E
SIZE	DIM	DIM	DIM	THICK	DIM

ALUMINUM: SY MIN=17KSI

PRODUCT REVISED
as complying with the Florida Building Code
NOA-No. 23-0821.05
Expiration Date 10/02/2028
By
Miami-Dade Product Control

JERRY TRAVIS MILLER- ENGINEER
FLORIDA LICENSE #89925
FLORIDA STATE CERTIFICATE
OF AUTHORITY #RY34386

JERRY TRAVIS MILLER
No 89925
STATE OF
FLORIDA
PROFESSIONAL ENGINEER
7/21/23

MAT'L	3003–H14 ALUM	
DRAWN	BFS	05/05/14
DESIGNER	BFS	SHEET 9 OF 11

DO NOT SCALE DRAWING
TOLERANCES UNLESS OTHERWISE NOTED

DECIMAL	FRACTIONAL
.XX=±.063"	≤12"=±1/16"
.XXX=±.010"	>12" THRU 96"=±1/8"
.XXXX=±.001"	>96" THRU 144"=±1/4"
ANGULAR ±2°	>144"=±3/8"
	(NC)=NO INSPECTION REQ'D

LOREN COOK CO.
MANUFACTURERS OF AIR MOVING EQUIPMENT
SPRINGFIELD, MISSOURI

ACE POWER VENTILATOR
HURRICANE RATED
—

SIZE	DRAWING NO.	REV.
B	SD080717–11	E

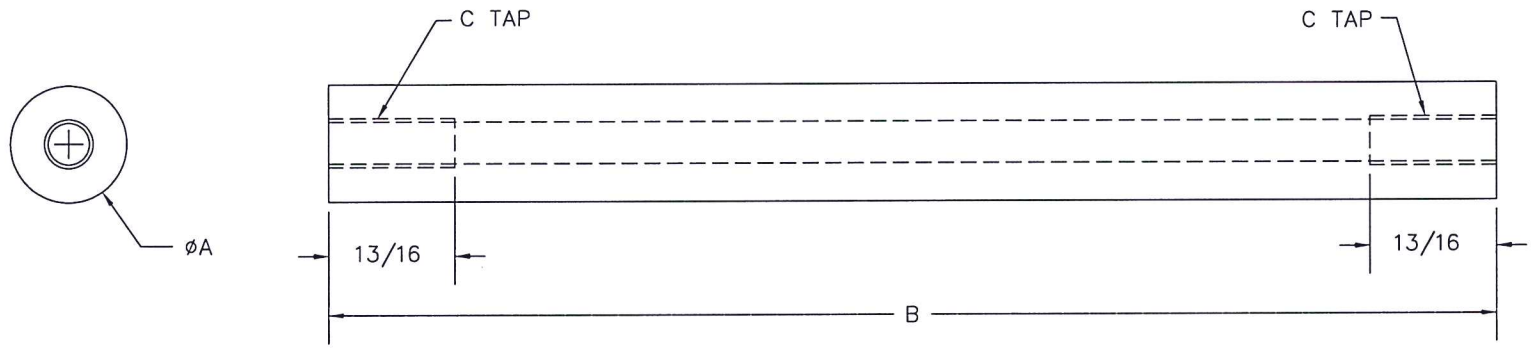

300	1	7	3/8–16	LOWER	8
270	1	6 1/8	3/8–16	LOWER	8
245	1	6 1/8	3/8–16	LOWER	4
225	3/4	4 7/8	5/16–18	LOWER	4
210	3/4	4 7/8	5/16–18	LOWER	4
195	3/4	4 1/2	5/16–18	LOWER	4
180	3/4	4 1/2	5/16–18	LOWER	4
165	3/4	3 1/8	5/16–18	LOWER	4
150	3/4	3 1/8	5/16–18	LOWER	4
135	3/4	2 1/4	5/16–18	LOWER	4
120	3/4	2 1/4	5/16–18	LOWER	4
60–100	3/4	2 1/2	5/16–18	LOWER	4
UNIT	A	B	C	POST	POST
SIZE	DIM	DIM	DIM	LOCATION	QUANTITY
ACE–B					

PRODUCT REVISED
as complying with the Florida Building Code
NOA-No. 23-0821.05
Expiration Date 10/02/2028
By
Miami-Dade Product Control

JERRY TRAVIS MILLER- ENGINEER
FLORIDA LICENSE #89925
FLORIDA STATE CERTIFICATE
OF AUTHORITY #RY34366

JERRY TRAVIS MILLER
No 89925
STATE OF
FLORIDA
PROFESSIONAL ENGINEER
7/21/23

ALUMINUM: SY MIN=35KSI

MAT'L	6005–T6 OR 6105–T5 ALUM	
DRAWN	BFS	05/05/14
DESIGNER	BFS	SHEET 10 OF 11

DO NOT SCALE DRAWING

TOLERANCES UNLESS OTHERWISE NOTED

DECIMAL	FRACTIONAL
.XX=±.063"	≤12"=±1/16"
.XXX=±.010"	>12" THRU 96"=±1/8"
.XXXX=±.001"	>96" THRU 144"=±1/4"
ANGULAR ±2°	>144"=±3/8"
	(NC)=NO INSPECTION REQ'D

LOREN COOK CO.
MANUFACTURERS OF AIR MOVING EQUIPMENT
SPRINGFIELD, MISSOURI

ACE POWER VENTILATOR
HURRICANE RATED

SIZE	DRAWING NO.	REV.
B	SD080717–11	E

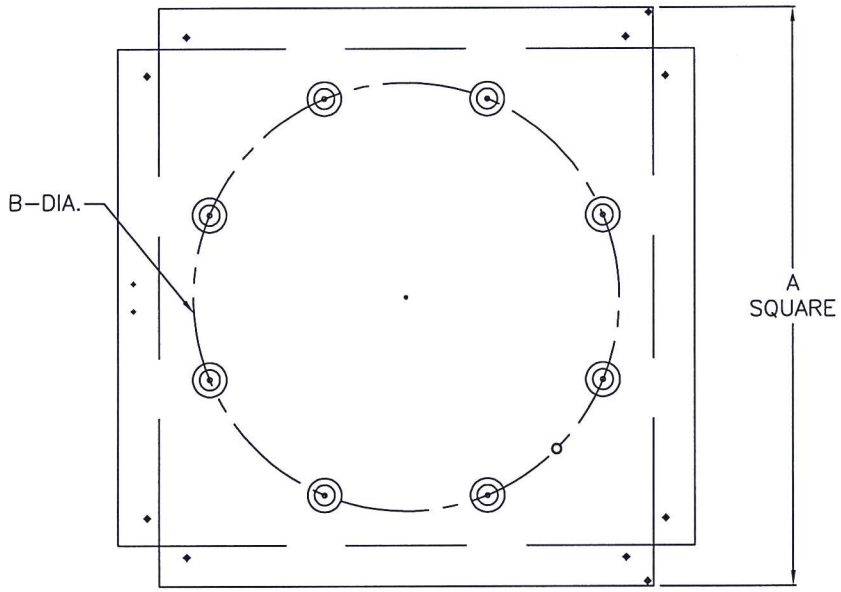

FLAT PATTERN

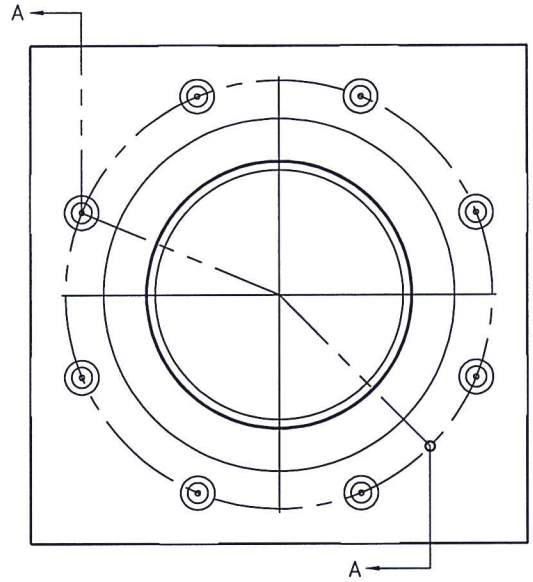

FORM VIEW

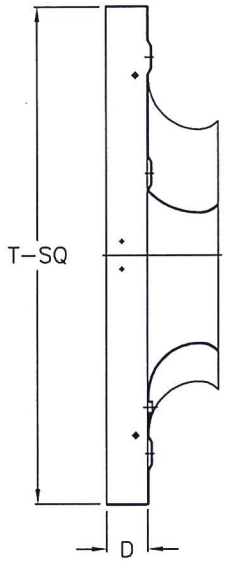

300	42	34	36	3	.080
270	42	31	36	3	.080
245	36	28	30	3	.080
225	36	26	30	3	.080
210	36	26	30	3	.080
195	36	22 1/2	30	3	.080
180	36	22 1/2	30	3	.080
165	28	19 1/2	24	2	.063
150	28	19 1/2	24	2	.063
135	24	16	20	2	.063
120	24	16	20	2	.063
60–100	22	12 1/4	18	2	.063
UNIT	A	B	T	D	E
SIZE	DIM	DIM	SQUARE	DIM	THICKNESS

PRODUCT REVISED
as complying with the Florida Building Code
NOA-No. 23-0821.05
Expiration Date 10/02/2028
By
Miami-Dade Product Control

JERRY TRAVIS MILLER- ENGINEER
FLORIDA LICENSE #89925
FLORIDA STATE CERTIFICATE
OF AUTHORITY #RY34386

JERRY TRAVIS MILLER
No 89925
STATE OF
FLORIDA
PROFESSIONAL ENGINEER
7/21/23

ALUMINUM: SY MIN=17KSI

MAT'L	"E" THICK 3003–H14 AL.	
DRAWN	BFS	05/05/14
DESIGNER	BFS	SHEET 11 OF 11

DO NOT SCALE DRAWING
TOLERANCES UNLESS OTHERWISE NOTED

DECIMAL	FRACTIONAL
.XX=±.063"	≤12"=±1/16"
.XXX=±.010"	>12" THRU 96"=±1/8"
.XXXX=±.001"	>96" THRU 144"=±1/4"
ANGULAR ±2°	>144"=±3/8"
	(NC)=NO INSPECTION REQ'D

LOREN COOK CO.
MANUFACTURERS OF AIR MOVING EQUIPMENT
SPRINGFIELD, MISSOURI

ACE POWER VENTILATOR
HURRICANE RATED

SIZE	DRAWING NO.	REV.
B	SD080717–11	E

MIAMI-DADE COUNTY
PRODUCT CONTROL SECTION
11805 SW 26 Street, Room 208
Miami, Florida 33175-2474
T (786) 315-2590 F (786) 315-2599
www.miamidade.gov/building

DEPARTMENT OF REGULATORY AND ECONOMIC RESOURCES (RER)
BOARD AND CODE ADMINISTRATION DIVISION

NOTICE OF ACCEPTANCE (NOA)

Loren Cook Company
2015 E. Dale Street
Springfield, MO 65803

SCOPE: This NOA is being issued under the applicable rules and regulations governing the use of construction materials. The documentation submitted has been reviewed and accepted by Miami-Dade County RER-Product Control Section to be used in Miami Dade County and other areas where allowed by the Authority Having Jurisdiction (AHJ).

This NOA shall not be valid after the expiration date stated below. The Miami-Dade County Product Control Section (In Miami Dade County) and/or the AHJ (in areas other than Miami Dade County) reserve the right to have this product or material tested for quality assurance purposes. If this product or material fails to perform in the accepted manner, the manufacturer will incur the expense of such testing and the AHJ may immediately revoke, modify, or suspend the use of such product or material within their jurisdiction. RER reserves the right to revoke this acceptance if it is determined by Miami-Dade County Product Control Section that this product or material fails to meet the requirements of the applicable building code.

This product is approved as described herein and has been designed to comply with the Florida Building Code, including the High Velocity Hurricane Zone.

DESCRIPTION: Models "ACRU, VCR, ACSC and ACW" Aluminum Rooftop and Wall Mounted Fans – L.M.I.

APPROVAL DOCUMENT: Drawing No. **SD080717-12**, titled "ACRU/VCR/ACSC/ACW Power Ventilator Hurricane Rated", sheet 1 through 12 of 12, dated 05/05/14, with revision G dated 11/06/2023, prepared by manufacturer, signed and sealed by Jerry T. Miller, P.E. bearing the Miami-Dade County Product Control Revision stamp with the Notice of Acceptance number and expiration date by the Miami-Dade County Product Control Section.

MISSILE IMPACT RATING: Large and Small Missile Impact Resistant

LABELING: Each unit shall bear a permanent label with the manufacturer's name or logo, manufacturing address, model number, the positive and negative design pressure rating, indicate impact rated if applicable, installation instruction drawing reference number, approval number (NOA), the applicable test standards, and the statement reading 'Miami-Dade County Product Control Approved' is to be located on the door's side track, bottom angle, or inner surface of a panel.

RENEWAL of this NOA shall be considered after a renewal application has been filed and there has been no change in the applicable building code negatively affecting the performance of this product.

TERMINATION of this NOA will occur after the expiration date or if there has been a revision or change in the materials, use, and/or manufacture of the product or process. Misuse of this NOA as an endorsement of any product, for sales, advertising or any other purposes shall automatically terminate this NOA. Failure to comply with any section of this NOA shall be cause for termination and removal of NOA.

ADVERTISEMENT: The NOA number preceded by the words Miami-Dade County, Florida, and followed by the expiration date may be displayed in advertising literature. If any portion of the NOA is displayed, then it shall be done in its entirety.

INSPECTION: A copy of this entire NOA shall be provided to the user by the manufacturer or its distributors and shall be available for inspection at the job site at the request of the Building Official.

This NOA **renews** and **revises NOA No. 17-0925.02** and consists of this page 1 and evidence page E-1, E-2 and E-3, as well as approval document mentioned above.

The submitted documentation was reviewed by **Carlos M. Utrera, P.E.**

MIAMI-DADE COUNTY APPROVED

NOA No. 23-0815.03
Expiration Date: November 13, 2028
Approval Date: November 22, 2023

NOTICE OF ACCEPTANCE: EVIDENCE SUBMITTED

1. EVIDENCE SUBMITTED UNDER PREVIOUS NOA's

A. DRAWINGS

1. Manufacturer's die drawings and sections.
   (Submitted under NOA No. 08-0424.03)
2. Drawing No. **SD080717-12**, titled "ACRU/VCR/ACSC/ACW Power Ventilator Hurricane Rated", sheets 1 through 12 of 12, dated 05/05/14, with revision G, prepared by manufacturer, signed and sealed by Bradley F. Skidmore, P.E.
   (Submitted under NOA No. 17-0925.02)

B. TESTS

1. Test report on: 1) Large Missile Impact Test per FBC, TAS 201-94
   along with marked up drawings and installation diagram of Models ACRU 70 and ACRU 300 Wall Mount Ventilators, prepared by Intertek, Test Report No. **H1597.01-801-18R1**, dated 08/21/17 and revision dated 12/06/17, signed and sealed by Tyler Westerling, P.E.
   (Submitted under NOA No. 17-0925.02)
2. Test reports on: 1) Uniform Static Air Pressure Test, Loading per FBC, TAS 202-94
   2) Large Missile Impact Test per FBC, TAS 201-94
   along with marked-up drawings and installation diagram of Models ACW 70 and ACW 245 Wall Mount Ventilators, prepared by Intertek, Test Report No. **H1597.02-801-18R1**, dated 08/21/17 and revision dated 12/06/17, signed and sealed by Tyler Westerling, P.E.
   (Submitted under NOA No. 17-0925.02)
3. Test reports on: 1) Uniform Static Air Pressure Test, Loading per FBC TAS 202-94
   2) Large Missile Impact Test per FBC, TAS 201-94
   along with marked-up drawings and installation diagram of Model ACRU/VCR 300 Rooftop Ventilator with 48" High Roof Curb, prepared by Intertek-ATI, Test Report No. **D7025.01-801-18**, dated 08/11/14, signed and sealed by Tyler Westerling, P.E.
   (Submitted under NOA No. 16-1108.05)
4. Test reports on: 1) Uniform Static Air Pressure Test, Loading per FBC TAS 202-94
   2) Large Missile Impact Test per FBC, TAS 201-94
   along with marked-up drawings and installation diagram of Models ACRU 70 and ACRU 300 Rooftop Ventilators, prepared by Intertek-ATI, Test Report No. **G1591.01-801-18**, dated 09/22/16, signed and sealed by Shawn G. Collins, P.E.
   (Submitted under NOA No. 14-1218.04)

Carlos M. Utrera, P.E.
Product Control Examiner
NOA No. 23-0815.03
Expiration Date: November 13, 2028
Approval Date: November 22, 2023

NOTICE OF ACCEPTANCE: EVIDENCE SUBMITTED

1. EVIDENCE SUBMITTED UNDER PREVIOUS NOA's (CONTINUED)

B. TESTS (CONTINUED)

5. Test reports on: 1) Uniform Static Air Pressure Test, Loading per FBC TAS 202-94
2) Large Missile Impact Test per FBC, TAS 201-94
3) Cyclic Wind Pressure Loading per FBC, TAS 203-94
along with marked-up drawings and installation diagram of Series/Models 300 ACRU/VCR, metal roof vent, prepared by Architectural Testing, Inc., Test Report No. **79142.01-801-18**, dated 03/03/08, signed and sealed by Jeffrey T. Kaminski, P.E.
(Submitted under NOA No. 08-0424.03)

C. CALCULATIONS

1. Wind loads and anchor capacity calculations dated 09/12/17, prepared by manufacturer, signed and sealed by Bradley F. Skidmore, P.E.
(Submitted under NOA No. 17-0925.02)

D. QUALITY ASSURANCE

1. Miami-Dade Department of Regulatory and Economic Resources (RER)

E. MATERIAL CERTIFICATIONS

1. None.

F. STATEMENTS

1. Statement letter of conformance, complying with **FBC 6th Edition (2017)** dated 09/20/17, issued by manufacturer, signed and sealed by Bradley F. Skidmore, P.E.
(Submitted under NOA No. 17-0925.02)

2. Statement letter of no financial interest dated 09/20/17, issued by manufacturer, signed and sealed by Bradley F. Skidmore, P.E.
(Submitted under NOA No. 17-0925.02)

G. OTHERS

1. Notice of Acceptance No. **16-1108.05**, issued to Loren Cook Company for their Series ACRU, VCR, ACSC and ACW Aluminum Rooftop and Wall Mounted Fans, approved on 12/15/16 and expiring on 11/13/18.

Carlos M. Utrera, P.E.
Product Control Examiner
NOA No. 23-0815.03
Expiration Date: November 13, 2028
Approval Date: November 22, 2023

NOTICE OF ACCEPTANCE: EVIDENCE SUBMITTED

2. EVIDENCE SUBMITTED UNDER NOA # 21-0405.05 AND NEW

A. DRAWINGS

1. Drawing No. **SD080717-12**, titled "ACRU/VCR/ACSC/ACW Power Ventilator Hurricane Rated", sheet 1 through 12 of 12, dated 05/05/14, with revision G dated 11/06/2023, prepared by manufacturer, signed and sealed by Jerry T. Miller, P.E.

B. TESTS

1. None.

C. CALCULATIONS

1. None.

D. QUALITY ASSURANCE

1. Miami-Dade Department of Regulatory and Economic Resources (RER).

E. MATERIAL CERTIFICATIONS

1. None.

F. STATEMENTS

1. Statement letter of conformance with the 8th edition (2023) of the FBC, issued by Miller Engineering, dated 07/28/2023, signed and sealed by Jerry T. Miller, P.E.
2. Statement letter of no financial interest, issued by Miller Engineering, dated 11/08/2023, signed and sealed by Jerry T. Miller, P.E.
3. Statement letter of conformance, complying with 7th edition (2020) of the FBC, issued by manufacturer, dated March 19, 2021, signed and sealed by Bradley F. Skidmore, P.E.

Carlos M. Utrera, P.E.
Product Control Examiner
NOA No. 23-0815.03
Expiration Date: November 13, 2028
Approval Date: November 22, 2023

Size	Type	A	B	C	D	T Sq.	NOMINAL WEIGHT
70	DIRECT	10–3/4	17–1/8	13–3/8	2	18	20
70	TALL DIRECT	10–3/4	17–1/8	14–3/8	2	18	21
90	DIRECT	13–1/4	21–1/8	16–3/8	2	18	28
90	TALL DIRECT	13–1/4	21–1/8	17–3/8	2	18	29
100	DIRECT	13–1/4	21–1/8	16–3/8	2	18	30
101	TALL DIRECT	13–1/4	21–1/8	20–3/16	2	18	31
70–100	BELT	12–1/2	23–9/16	21–1/8	2	18	50
120	BELT/DIRECT	19–1/16	28–7/16	26–7/8	2	20	81
135	BELT/DIRECT	19–1/16	28–7/16	27–1/4	2	20	86
150	BELT/DIRECT	20–15/16	32–7/8	30–1/4	2	24	102
	HP BELT/DIRECT	20–15/16	32–7/8	27–1/2	2	24	100
165	BELT/DIRECT	20–15/16	32–7/8	30–3/4	2	24	108
	HP BELT/DIRECT	20–15/16	32–7/8	27–3/4	2	24	106
	XP BELT/DIRECT	20–15/16	32–7/8	26–11/16	2	24	104
180	BELT/DIRECT	24–13/16	37–11/16	35–7/8	3	30	125
	HP BELT/DIRECT	24–13/16	37–11/16	33–3/8	3	30	123
	XP BELT/DIRECT	24–13/16	37–11/16	31–9/16	3	30	121
195	BELT/DIRECT	24–13/16	37–11/16	36–3/8	3	30	135
	HP BELT/DIRECT	24–13/16	37–11/16	33–1/2	3	30	133
	XP BELT/DIRECT	24–13/16	37–11/16	32–1/8	3	30	131
210	BELT/DIRECT	25–15/16	43–5/8	38–3/8	3	30	190
	HP BELT/DIRECT	25–15/16	43–5/8	35–3/8	3	30	186
	XP BELT/DIRECT	25–15/16	43–5/8	32–3/4	3	30	182
225	BELT/DIRECT	25–15/16	43–5/8	38–1/8	3	30	212
	HP BELT/DIRECT	25–15/16	43–5/8	35–1/2	3	30	208
	XP BELT/DIRECT	25–15/16	43–5/8	33–5/16	3	30	204
245	BELT/DIRECT	28–1/2	47–5/8	41–1/16	3	30	234
	HP BELT/DIRECT	28–1/2	47–5/8	37–5/16	3	30	230
	XP BELT/DIRECT	28–1/2	47–5/8	34–1/16	3	30	226
270	BELT/DIRECT	28–1/2	47–5/8	41–1/16	3	36	256
	HP BELT/DIRECT	28–1/2	47–5/8	37–5/16	3	36	252
	XP BELT/DIRECT	28–1/2	47–5/8	35	3	36	248
300	BELT/DIRECT	33–7/8	52–5/8	49–15/16	3	36	306
	HP BELT/DIRECT	33–7/8	52–5/8	45–15/16	3	36	300
	XP BELT/DIRECT	33–7/8	52–5/8	41–7/16	3	36	294

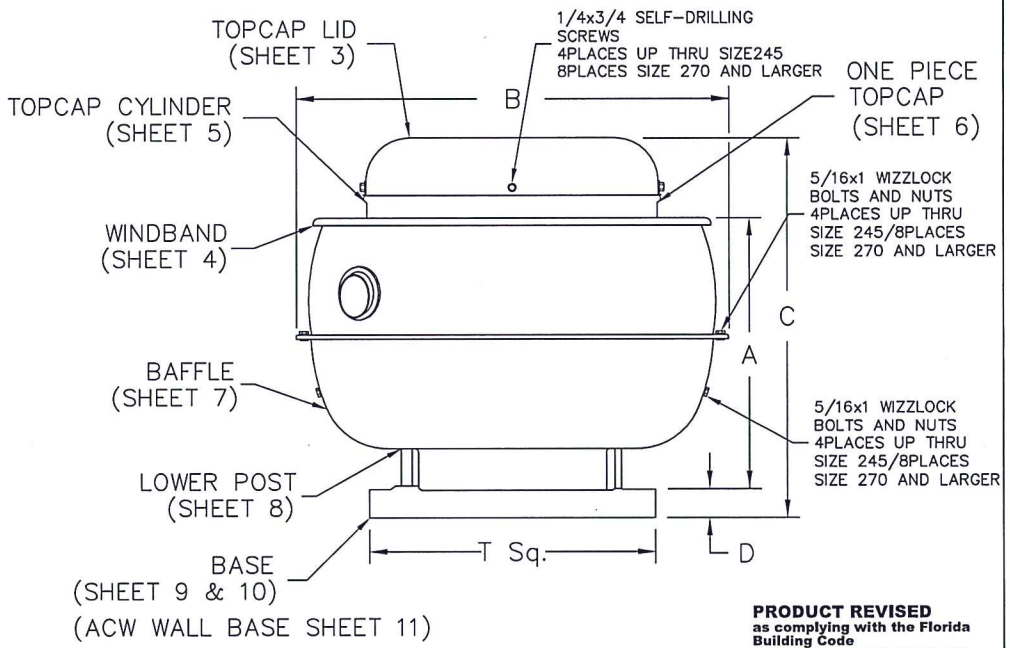

PRODUCT REVISED
as complying with the Florida Building Code
NOA-No. 23-0815.03
Expiration Date 11/13/2028
By
Miami-Dade Product Control

DESIGN PRESSURE: +150 PSF / –150 PSF

IMPACT RATING: LARGE MISSLE IMPACT RESISTANT

DESIGN TESTING AND INSTALLATION CONFORMS TO FLORIDA BUILDING CODE

ALL DIMENSIONS IN INCHES/ALL WEIGHTS IN POUNDS

JERRY TRAVIS MILLER- ENGINEER
FLORIDA LICENSE #89925
FLORIDA STATE CERTIFICATE
OF AUTHORITY #RY34386

JERRY TRAVIS MILLER
No 89925
STATE OF
FLORIDA
PROFESSIONAL ENGINEER
11/6/23

MAT'L	–	
DRAWN	BFS	05/05/14
DESIGNER	BFS	SHEET 1 OF 12

DO NOT SCALE DRAWING
TOLERANCES UNLESS OTHERWISE NOTED

DECIMAL	FRACTIONAL
.XX=±.063"	≤12"=±1/16"
.XXX=±.010"	>12" THRU 96"=±1/8"
.XXXX=±.001"	>96" THRU 144"=±1/4"
	>144"=±3/8"
ANGULAR ±2°	(NC)=NO INSPECTION REQ'D

LOREN COOK CO.
MANUFACTURERS OF AIR MOVING EQUIPMENT
SPRINGFIELD, MISSOURI

ACRU/VCR/ACSC/ACW
POWER VENTILATOR
HURRICANE RATED

SIZE	DRAWING NO.	REV.
B	SD080717–12	G

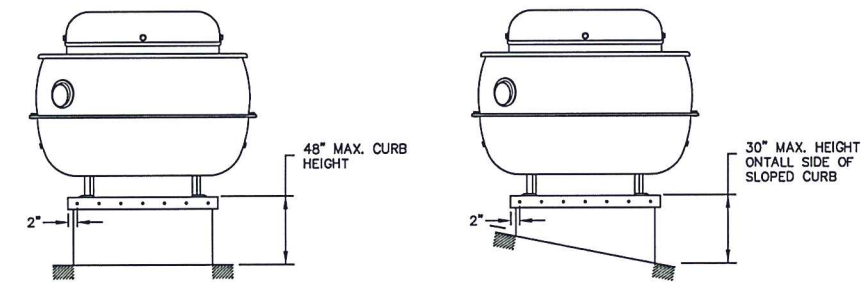

ATTACHMENT OF CURB TO ROOF STRUCTURE

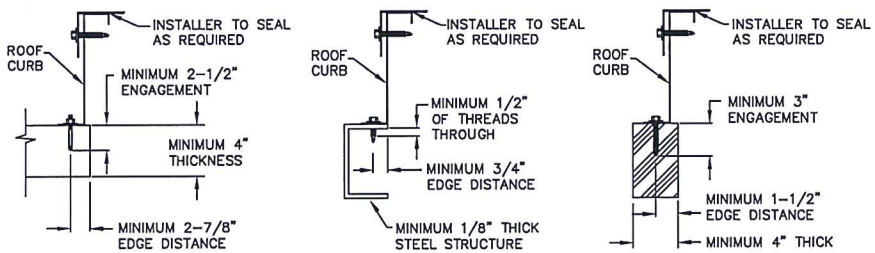

CONCRETE ROOF DECK	STEEL ROOF STRUCTURE	WOOD ROOF STRUCTURE
MINIMUM 2500PSI CONCRETE	A36 STEEL STRUCTURE MINIMUM Fy=36KSI	MIN. 4" NOMINAL THICK WOOD MIN SG = .42

FASTENER TABLE		
UNIT SIZE	MINIMUM NUMBER OF FASTENERS PER SIDE TO ATTACH UNIT TO CURB	MINIMUM NUMBER OF FASTENERS PER SIDE TO ATTACH CURB TO ROOF STRUCTURE
70	5	5
90	5	5
70-100	5	5
101	5	5
120	5	6
135	5	6
150	6	7
165	6	7
180	8	8
195	8	8
210	8	9
225	8	9
245	8	10
270	9	10
300	9	14

PRODUCT REVISED
as complying with the Florida Building Code
NOA-No. 23-0815.03
Expiration Date 11/13/2028
By
Miami-Dade Product Control

JERRY TRAVIS MILLER- ENGINEER
FLORIDA LICENSE #89925
FLORIDA STATE CERTIFICATE
OF AUTHORITY #RY34366

JERRY TRAVIS MILLER
No 89925
STATE OF
FLORIDA
PROFESSIONAL ENGINEER
11/6/23

NOTES:

1) ACRU/VCR/ACW POWER VENTILATOR AS REFERRED TO HEREIN REFERS TO ALL LOREN COOK MODEL POWER VENTILATORS INCLUDING BOTH DIRECT DRIVE AND BELT DRIVE TYPE UNITS WHICH ARE CONSTRUCTED WITH THE SAME OUTER HOUSING COMPONENTS. THE FULL RANGE OF MODELS WOULD BE:
   ACRUD, ACRUD-HP, ACRUD-XP
   ACRUB, ACRUB-HP, ACRUB-XP
   VCRD, VCRD-HP, VCRD-XP
   VCR, VCR-XP, VCR-HP
   ACSC, ACSC-HP, ACSC-XP
   ACWD, ACWD-HP, ACWD-XP, ACWDEC, ACWDEC-HP, ACWDEC-XP, ACWB, ACWB-HP, ACWB-XP
2) THIS APPROVAL IS FOR THE STRUCTURAL CAPACITY OF THE EXTERIOR HOUSING ONLY, IT DOES NOT INCLUDE ANY INTERIOR MECHANISM OR ELECTRICAL PART.
3) THIS PRODUCT HAS NOT BEEN TESTED FOR WATER PENETRATION ACCORDING TO FLORIDA BUILDING CODE TAS 100(A) WIND DRIVEN RAIN TEST. IT CANNOT BE INSTALLED WITHIN THE RIDGE AREA FBC 1523.6.5.2.13
4) UNIT IS TO INCLUDE A CURB CAP BASE TO FACILITATE MOUNTING OF THE UNIT TO A CURB. THE CURB WILL BE ADEQUATELY ATTACHED TO THE BUILDING STRUCTURE TO SUSTAIN ALL FORCES WHICH MAY BE PRODUCED BY THE PRESCRIBED ENVIROMENTAL FORCES EXERTED ON THE FAN AND CURB. THE CURB MUST BE ATTACHED TO A STRUCTURAL MEMBER OF THE BUILDING.
   CONCRETE DECK: CURB IS TO BE ATTACHED WITH WEDGE TYPE CONCRETE ANCHOR – MINIMUM 3/8" DIAMETER CARBON STEEL – HILTI KWIK BOLT 3 OR EQUAL. MINIMUM 2-1/2" OF ENGAGEMENT IN 2000 PSI MINIMUM CONCRETE. MINIMUM DECK THICKNESS IS 4". SEE TABLE FOR MINIMUM QUANTITY OF ANCHORS REQUIRED PER CURB SIDE.
   STEEL ROOF STRUCTURE: CURB IS TO BE ATTACHED WITH SELF-DRILLING STEEL SCREW OF MINIMUM NOMINAL SIZE OF #12. THE SCREW SHALL PASS THROUGH STEEL STRUCTURE AT LEAST 1/2". SEE TABLE FOR MINIMUM QUANTITY OF SCREWS REQUIRED PER CURB SIDE.
   WOOD ROOF STRUCTURE: CURB IS TO BE ATTACHED WITH STEEL LAG BOLTS NOMINAL SIZE OF 5/16" DIAMETER OR LARGER. WOOD IS TO BE 4" NOMINAL SIZE OR GREATER. THE BOLT SHALL HAVE A MINIMUM OF 3" OF THREAD ENGAGEMENT AND SHALL BE AT LEAST 1-1/2" FROM MATERIAL EDGE. SEE TABLE FOR MINIMUM QUANTITY OF BOLTS REQUIRED PER CURB SIDE.
5) THE CURB SHALL BE CONSTRUCTED OF G-90 GALVANIZED STEEL OR 3003-H24 ALUMINUM OR STAINLESS STEEL. THE CURB MATERIAL THICKNESS SHALL BE 18 GA (.0470") OR GREATER. THE CURB HEIGHT SHALL NOT EXCEED 48".
6) THE ACRU/VCR POWER VENTILATOR SHALL BE ATTACHED TO THE CURB WITH ONE OF THE FOLLOWING METHODS INSTALLED ON ALL FOUR SIDES OF THE CURB CAP OR THRU USE OF THE ACCESSORY HINGED BASE. THE FASTENERS SHALL BE 2" FROM EACH CORNER OF THE FAN BASE. THE DISTANCE BETWEEN FASTENERS SHALL BE 5-1/2" OR LESS. THE QUANTITY OF FASTENERS INTO EACH CURB SIDED SHALL EQUAL OR EXCEED THE QUANTITY SHOWN IN THE FASTENER TABLE (AT LEFT).
   A) #12 X 2" HEX WASHER HEAD SELF-DRILLING SCREW
   B) ALTERNATE FASTENER – .25" HEX HEAD BOLT AND WASHER WITH COMPANION NUT INSTALLED ON THE INTERIOR OF THE CURB.
7) ALL FASTENERS ARE TO BE HIGH QUALITY CORROSION RESISTANT STEEL OR STAINLESS STEEL.
8) ANY GAP BETWEEN THE CURB AND CURB CAP SHALL BE FILLED BY THE INSTALLING CONTRACTOR WITH A SUITABLE CORROSION RESISTANT MATERIAL THAT ALLOWS THE FASTENERS TO BE INSTALLED WITHOUT CAUSING EXCESSIVE DISTORTION OF THE UNIT FLANGES.
9) THE INSTALLER IS RESPONSIBLE FOR CHECKING THAT ALL FASTENERS ARE PROPERLY INSTALLED AND ALL ACCESS PANELS ARE IN PLACE BEFORE PUTTING THE UNIT INTO SERVICE.
10) ALL FASTENERS AND ACCESS PANELS MUST BE PROPERLY INSTALLED AFTER MAINTENANCE OPERATIONS FOR UNIT TO MAINTAIN CODE COMPLIANCE.

MAT'L	–	
DRAWN	BFS	05/05/14
DESIGNER	BFS	SHEET 2 OF 12

DONO T SCALDRAWING
TOLERAN CE SI N LESS TOERWISE NOTED

DECIMAL	FRACTIONAL
.XX=±.063" .XXX=±.010" .XXXX=±.001"	≤12"=±1/16" >12" THRU 96"=±1/8" >96" THRU 144"=±1/4" >144"=±3/8"
ANGULAR ±2°	(NC)=NO INSPECTION REQ'D

LOREN COOK CO.
MANUFACTURERS OF AIR MOVING EQUIPMENT
SPRINGFIELD, MISSOURI

ACRU/VCR/ACSC/ACW
POWER VENTILATOR
HURRICANE RATED

SIZE	DRAWING NO.	REV.
B	SD080717-12	G

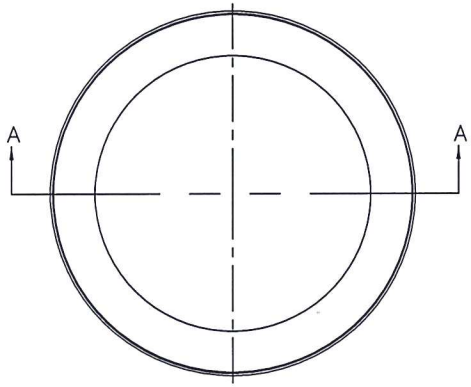

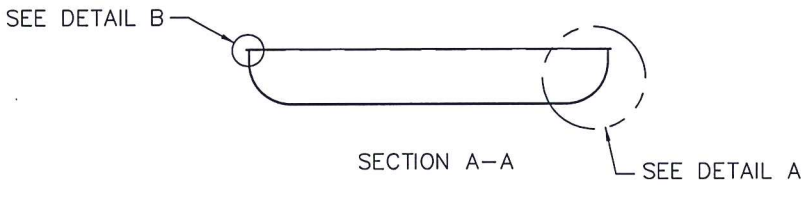

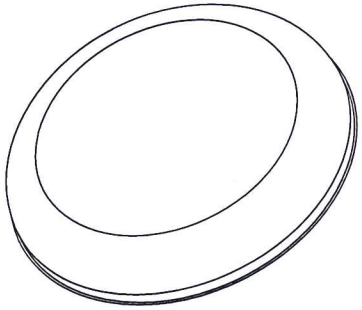

PRODUCT REVISED
as complying with the Florida Building Code
NOA-No. 23-0815.03
Expiration Date 11/13/2028
By
Miami-Dade Product Control

300	39–7/32	0.063
270	35–23/32	0.063
245	32–23/32	0.063
210–225	29–23/32	0.063
180–195	25–31/32	0.050
150–165	23–21/32	0.050
120–135	20–7/32	0.050
70–100	16–19/32	0.050
UNIT	A	MATERIAL
SIZE	DIM	THICKNESS

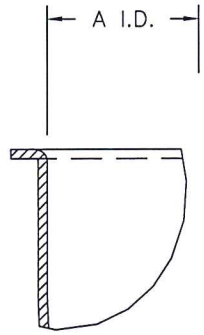

DETAIL B
SCALE 2.0

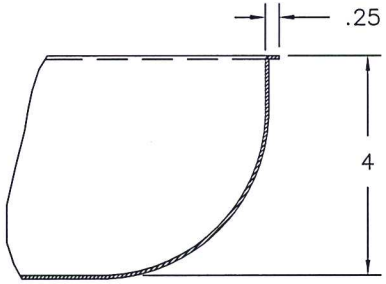

DETAIL A
SCALE 0.750

JERRY TRAVIS MILLER- ENGINEER
FLORIDA LICENSE #89925
FLORIDA STATE CERTIFICATE
OF AUTHORITY #RY34366

JERRY TRAVIS MILLER
No 89925
STATE OF
FLORIDA
PROFESSIONAL ENGINEER
11/6/23

ALUMINUM: SY MIN=17KSI

MAT'L	3003 H14 ALUM .05 THICK	
DRAWN	BFS	05/05/14
DESIGNER	BFS	SHEET 3 OF 12

DO NOT SCALE DRAWING
TOLERANCES UNLESS OTHERWISE NOTED

DECIMAL	FRACTIONAL
.XX=±.063"	≤12"=±1/16"
.XXX=±.010"	>12" THRU 96"=±1/8"
.XXXX=±.001"	>96" THRU 144"=±1/4"
ANGULAR ±2°	>144"=±3/8"
	(NC)=NO INSPECTION REQ'D

LOREN COOK CO.
MANUFACTURERS OF AIR MOVING EQUIPMENT
SPRINGFIELD, MISSOURI

ACRU/VCR/ACSC/ACW
POWER VENTILATOR
HURRICANE RATED

SIZE	DRAWING NO.	REV.
B	SD080717–12	G

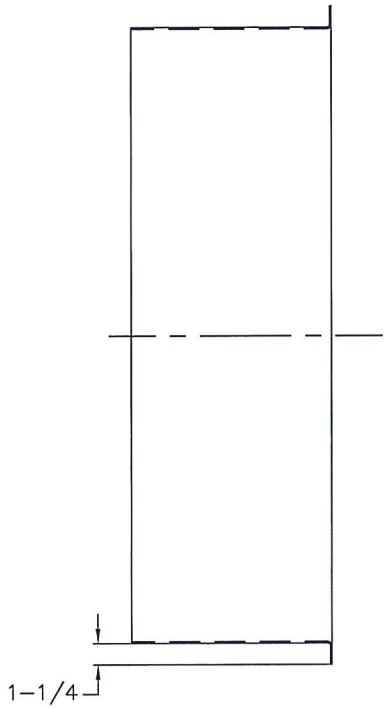

STEP ONE SPINNING

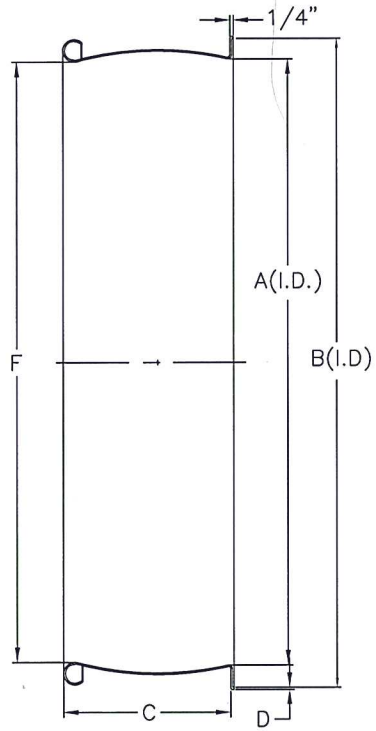

WIND BAND SIDE VIEW

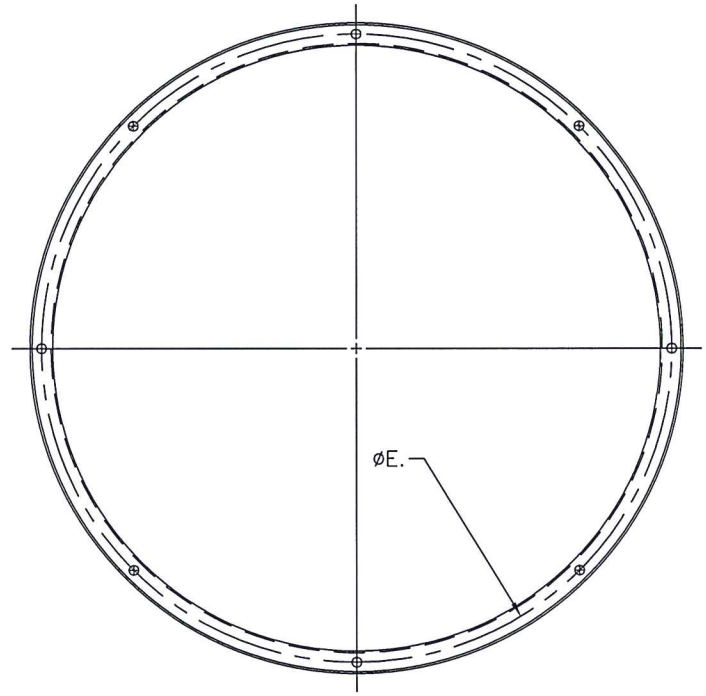

WIND BAND TOP VIEW

300	52	54-1/8	12	.050	53
270	47	49-1/8	10	.050	48
245	47	49-1/8	10	.050	48
210-225	43	45-1/8	10	.050	44
180-195	37-1/4	39-3/8	10	.040	38-1/4
150-165	32-1/2	34-5/8	8-1/2	.040	33-1/2
120-135	28	30-1/8	8-1/2	.040	29
100	23	25-1/8	6-1/2	.040	24
UNIT	A	B	C	D	E
SIZE	DIM	DIM	DIM	DIM	DIM

PRODUCT REVISED
as complying with the Florida Building Code
NOA-No. 23-0815.03
Expiration Date 11/13/2028
By
Miami-Dade Product Control

JERRY TRAVIS MILLER- ENGINEER
FLORIDA LICENSE #89925
FLORIDA STATE CERTIFICATE
OF AUTHORITY #RY34386

JERRY TRAVIS MILLER
No 89925
STATE OF
FLORIDA
PROFESSIONAL ENGINEER
11/6/23

ALUMINUM: SY MIN=17KSI

MAT'L	D THICK 1100-0 ALUM	
DRAWN	BFS	05/05/14
DESIGNER	BFS	SHEET 4 OF 12

DO NOT SCALE DRAWING
TOLERANCES UNLESS OTHERWISE NOTED

DECIMAL	FRACTIONAL
.XX=±.063"	≤12"=±1/16"
.XXX=±.010"	>12" THRU 96"=±1/8"
.XXXX=±.001"	>96" THRU 144"=±1/4"
ANGULAR ±2°	>144"=±3/8"
	(NC)=NO INSPECTION REQ'D

LOREN COOK CO.
MANUFACTURERS OF AIR MOVING EQUIPMENT
SPRINGFIELD, MISSOURI

ACRU/VCR/ACSC/ACW
POWER VENTILATOR
HURRICANE RATED

SIZE	DRAWING NO.	REV.
B	SD080717-12	G

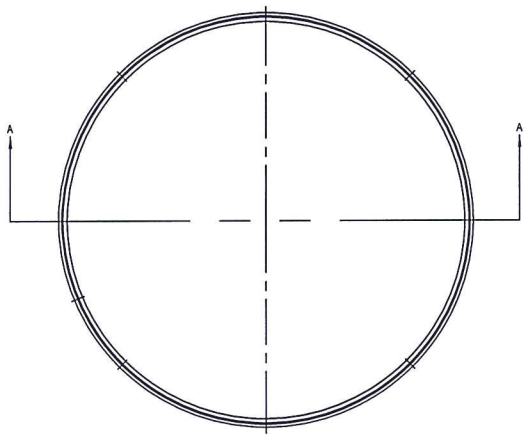

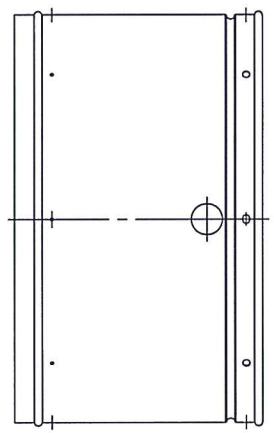

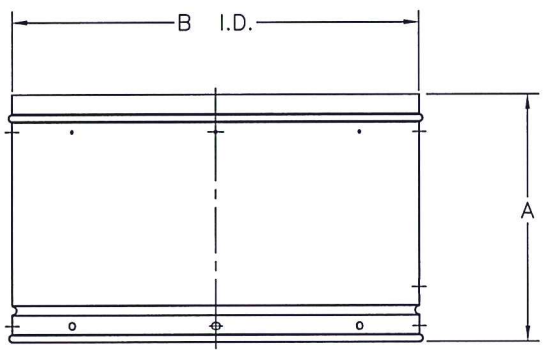

SECTION A–A

300	22	39–1/32	0.050
270	16–1/4	35–17/32	0.040
245	16–1/4	32–17/32	0.040
210–225	16–1/4	29–17/32	0.040
120–135	13	20–1/32	0.040
70–100 BELT	8–1/2	16–13/32	0.040
UNIT	A	B	THICKNESS
SIZE	DIM	DIM	MATERIAL

PRODUCT REVISED
as complying with the Florida Building Code
NOA-No. 23-0815.03
Expiration Date 11/13/2028
By
Miami-Dade Product Control

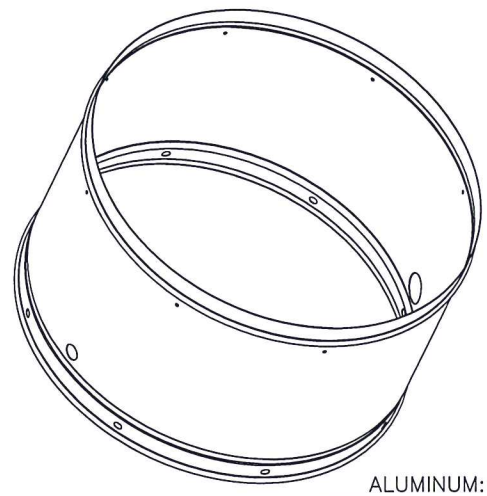

JERRY TRAVIS MILLER- ENGINEER
FLORIDA LICENSE #89925
FLORIDA STATE CERTIFICATE
OF AUTHORITY #RY34386

JERRY TRAVIS MILLER
No 89925
STATE OF
FLORIDA
PROFESSIONAL ENGINEER
11/6/23

ALUMINUM: SY MIN=17KSI

MAT'L	SEE TABLE	
DRAWN	BFS	05/05/14
DESIGNER	BFS	SHEET 5 OF 12

DO NOT SCALE DRAWING
TOLERANCES UNLESS OTHERWISE NOTED

DECIMAL	FRACTIONAL
.XX=±.063"	≤12"=±1/16"
.XXX=±.010"	>12" THRU 96"=±1/8"
.XXXX=±.001"	>96" THRU 144"=±1/4"
ANGULAR ±2°	>144"=±3/8"
	(NC)=NO INSPECTION REQ'D

LOREN COOK CO.®
MANUFACTURERS OF AIR MOVING EQUIPMENT
SPRINGFIELD, MISSOURI

ACRU/VCR/ACSC/ACW
POWER VENTILATOR
HURRICANE RATED

SIZE	DRAWING NO.	REV.
B	SD080717–12	G

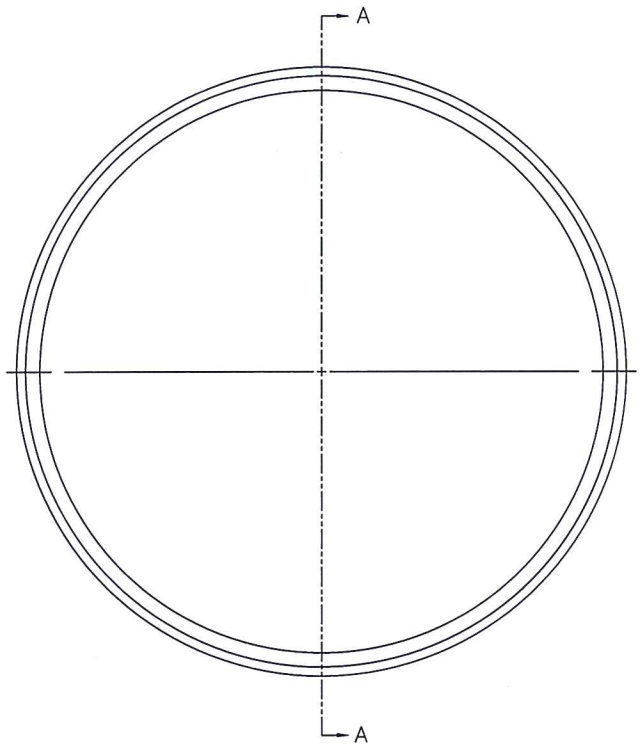

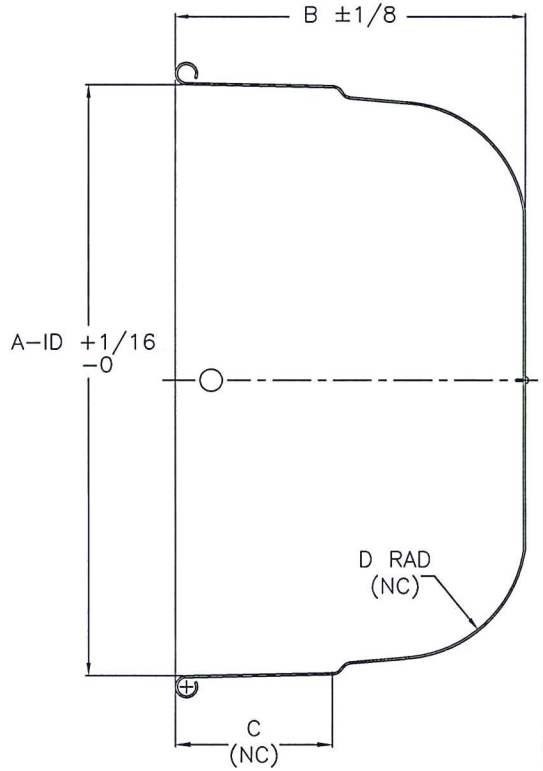

SECTION A–A

90–100 EXTRA DEEP	13–7/16	10	3–9/16	2–7/16
90–100	13–7/16	7–3/4	3–9/16	2–7/16
70 EXTRA DEEP	10–5/8	7–1/2	3–1/4	1–7/8
70	10–5/8	6–1/2	3–1/4	1–7/8
UNIT	A	B	C	D
SIZE	DIM	DIM	DIM	DIM
DIRECT DRIVE				

PRODUCT REVISED
as complying with the Florida Building Code
NOA-No. 23-0815.03
Expiration Date 11/13/2028
By
Miami-Dade Product Control

JERRY TRAVIS MILLER- ENGINEER
FLORIDA LICENSE #89925
FLORIDA STATE CERTIFICATE
OF AUTHORITY #RY34386

JERRY TRAVIS MILLER
No 89925
STATE OF
FLORIDA
PROFESSIONAL ENGINEER
11/6/23

ALUMINUM: SY MIN=17KSI

MAT'L	1100–0 ALUM .064 THICK	
DRAWN	BFS	05/05/14
DESIGNER	BFS	SHEET 6 OF 12

DO NOT SCALE DRAWING
TOLERANCES UNLESS OTHERWISE NOTED

DECIMAL	FRACTIONAL
.XX=±.063" .XXX=±.010" .XXXX=±.001"	≤12"=±1/16" >12" THRU 96"=±1/8" >96" THRU 144"=±1/4" >144"=±3/8"
ANGULAR ±2°	(NC)=NO INSPECTION REQ'D

LOREN COOK CO.
MANUFACTURERS OF AIR MOVING EQUIPMENT
SPRINGFIELD, MISSOURI

ACRU/VCR/ACSC/ACW
POWER VENTILATOR
HURRICANE RATED

SIZE	DRAWING NO.	REV.
B	SD080717–12	G

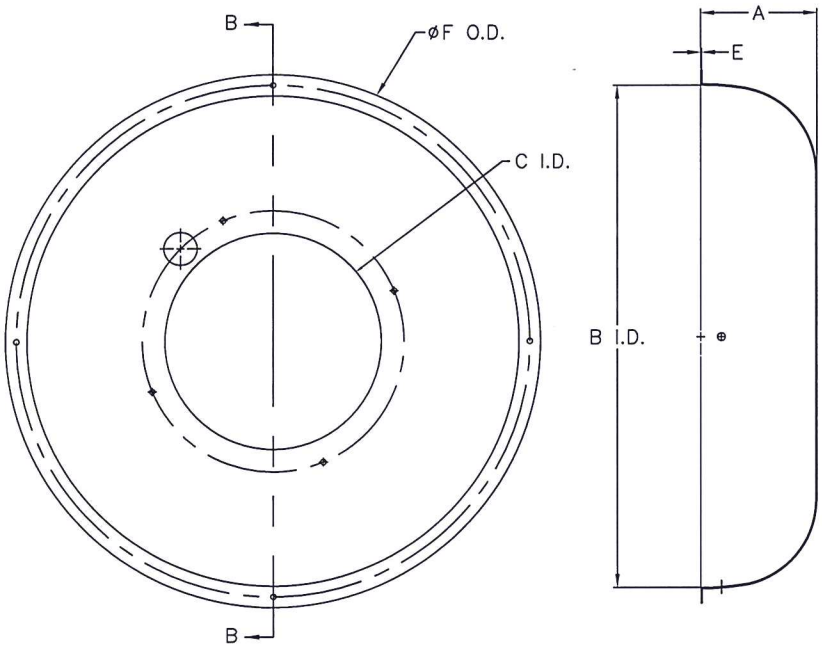

300	14–3/4	52	31–3/8	19–13/16	0.080	54
270	12–1/4	47	28–3/8	15–11/32	0.080	49
245	12–1/4	47	25–7/8	15–11/32	0.080	49
210–225	11	43	23–3/8	14–5/16	0.080	45
180–195	10–3/8	37–1/4	19–3/8	12–1/2	0.080	39–1/4
150–165	9–1/2	32–1/2	15–7/8	10–9/16	0.064	34–1/2
120–135	8–1/4	28	12–7/8	8–3/4	0.064	30
100	5–7/16	23	10–1/8	7–5/16	0.064	25
UNIT	DIM	DIM	DIM	DIM	DIM	DIM
SIZE	A	B	C	D	E	F

PRODUCT REVISED
as complying with the Florida Building Code
NOA-No. 23-0815.03
Expiration Date 11/13/2028
By
Miami-Dade Product Control

JERRY TRAVIS MILLER- ENGINEER
FLORIDA LICENSE #89925
FLORIDA STATE CERTIFICATE
OF AUTHORITY #RY34386

JERRY TRAVIS MILLER
No 89925
STATE OF
FLORIDA
PROFESSIONAL ENGINEER
11/6/23

ALUMINUM: SY MIN=17KSI

MAT'L	3003–0 ALUM "E" THICK	
DRAWN	BFS	05/05/14
DESIGNER	BFS	SHEET 7 OF 12

DO NOT SCALE DRAWING
TOLERANCES UNLESS OTHERWISE NOTED

DECIMAL	FRACTIONAL
.XX=±.063"	≤12"=±1/16"
.XXX=±.010"	>12" THRU 96"=±1/8"
.XXXX=±.001"	>96" THRU 144"=±1/4"
	>144"=±3/8"
ANGULAR ±2°	(NC)=NO INSPECTION REQ'D

LOREN COOK CO.
MANUFACTURERS OF AIR MOVING EQUIPMENT
SPRINGFIELD, MISSOURI

ACRU/VCR/ACSC/ACW
POWER VENTILATOR
HURRICANE RATED

SIZE	DRAWING NO.	REV.
B	SD080717–12	G

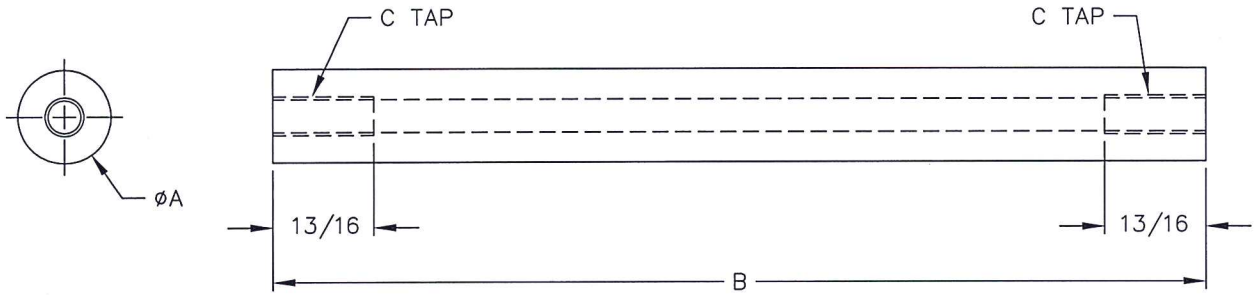

300	1	7	3/8–16	LOWER	8
270	1	6 1/8	3/8–16	LOWER	8
245	1	6 1/8	3/8–16	LOWER	4
225	3/4	4 7/8	5/16–18	LOWER	4
210	3/4	4 7/8	5/16–18	LOWER	4
195	3/4	4 1/2	5/16–18	LOWER	4
180	3/4	4 1/2	5/16–18	LOWER	4
165	3/4	3 1/8	5/16–18	LOWER	4
150	3/4	3 1/8	5/16–18	LOWER	4
135	3/4	2 1/4	5/16–18	LOWER	4
120	3/4	2 1/4	5/16–18	LOWER	4
70–100	3/4	2 1/2	5/16–18	LOWER	4
UNIT	A	B	C	POST	POST
SIZE	DIM	DIM	DIM	LOCATION	QUANTITY
ACRU/VCR/ACSC/ACW					

PRODUCT REVISED
as complying with the Florida Building Code
NOA-No. 23-0815.03
Expiration Date 11/13/2028
By
Miami-Dade Product Control

JERRY TRAVIS MILLER- ENGINEER
FLORIDA LICENSE #89925
FLORIDA STATE CERTIFICATE
OF AUTHORITY #RY34386

JERRY TRAVIS MILLER
No 89925
STATE OF
FLORIDA
PROFESSIONAL ENGINEER
11/6/23

ALUMINUM: SY MIN=35KSI

MAT'L	ØA 6005–T6 OR 6105–T5	
DRAWN	BFS	05/05/14
DESIGNER	BFS	SHEET 8 OF 12

DO NOT SCALE DRAWING
TOLERANCES UNLESS OTHERWISE NOTED

DECIMAL	FRACTIONAL
.XX=±.063"	≤12"=±1/16"
.XXX=±.010"	>12" THRU 96"=±1/8"
.XXXX=±.001"	>96" THRU 144"=±1/4"
	>144"=±3/8"
ANGULAR ±2°	(NC)=NO INSPECTION REQ'D

LOREN COOK CO.
MANUFACTURERS OF AIR MOVING EQUIPMENT
SPRINGFIELD, MISSOURI

ACRU/VCR/ACSC/ACW
POWER VENTILATOR
HURRICANE RATED

SIZE	DRAWING NO.	REV.
B	SD080717–12	G

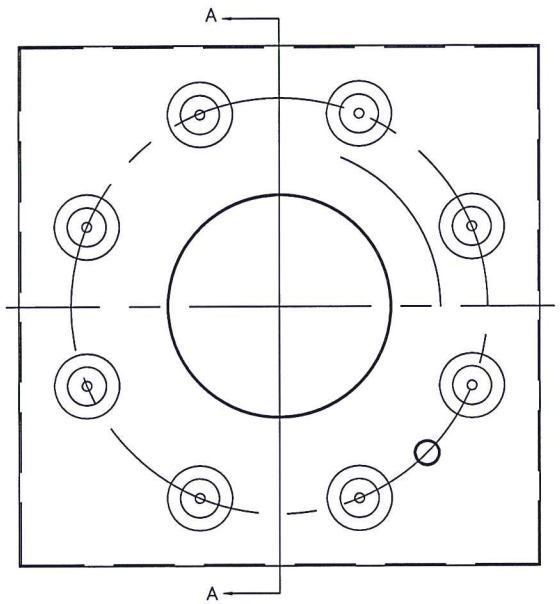

TOP VIEW
SIZE 150

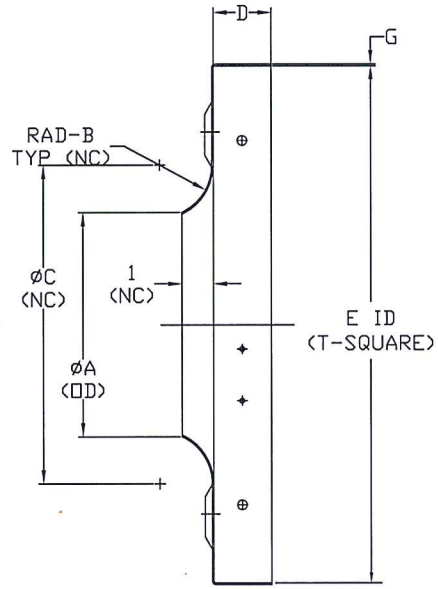

A–A SECTION
VIEW
SIZE 150

225	17–1/4	3–1/2	22	3	30	.080
210	16–1/2	3–1/2	20–15/16	3	30	.080
195	14–1/8	3	19	3	30	.080
180	13–1/2	1–1/2	16–1/2	3	30	.080
165	11–7/8	2–1/2	16	2	24	.064
150	10–3/4	2–1/2	15	2	24	.064
135	9–3/8	2	13	2	20	.064
120	8–9/16	2	12	2	20	.064
UNIT	A	B	C	D	E	F
SIZE	DIM	DIM	DIM	DIM	DIM	DIM

PRODUCT REVISED
as complying with the Florida Building Code
NOA-No. 23-0815.03
Expiration Date 11/13/2028
By
Miami-Dade Product Control

JERRY TRAVIS MILLER- ENGINEER
FLORIDA LICENSE #89925
FLORIDA STATE CERTIFICATE
OF AUTHORITY #RY34386

JERRY TRAVIS MILLER
No 89925
STATE OF
FLORIDA
PROFESSIONAL ENGINEER
11/6/23

ALUMINUM: SY MIN=17KSI

MAT'L	3003–H14 ALUM. "F" GA.	
DRAWN	BFS	05/05/14
DESIGNER	BFS	SHEET 9 OF 12

DO NOT SCALE DRAWING
TOLERANCES UNLESS OTHERWISE NOTED

DECIMAL	FRACTIONAL
.XX=±.063"	≤12"=±1/16"
.XXX=±.010"	>12" THRU 96"=±1/8"
.XXXX=±.001"	>96" THRU 144"=±1/4"
ANGULAR ±2°	>144"=±3/8"

(NC)=NO INSPECTION REQ'D

LOREN COOK CO.
MANUFACTURERS OF AIR MOVING EQUIPMENT
SPRINGFIELD, MISSOURI

ACRU/VCR/ACSC/ACW
POWER VENTILATOR
HURRICANE RATED

SIZE	DRAWING NO.	REV.
B	SD080717–12	G

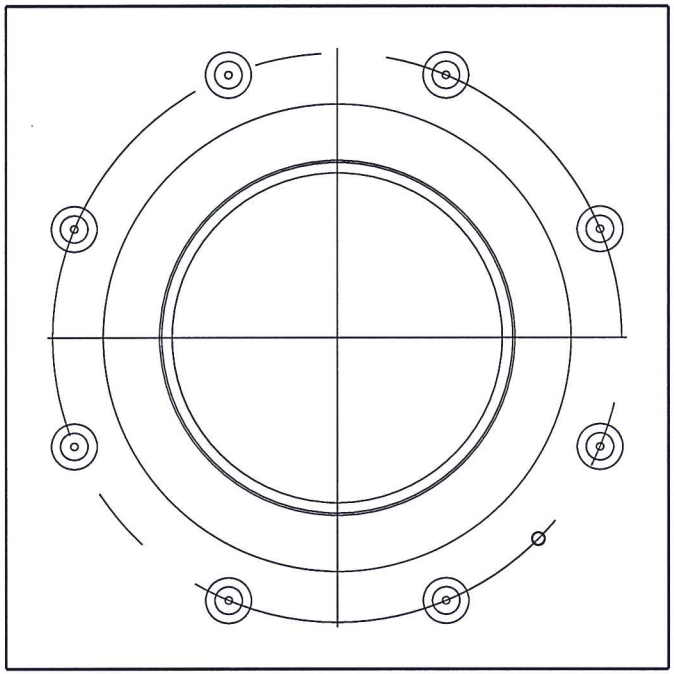

FORM VIEW
SIZE 270 SHOWN

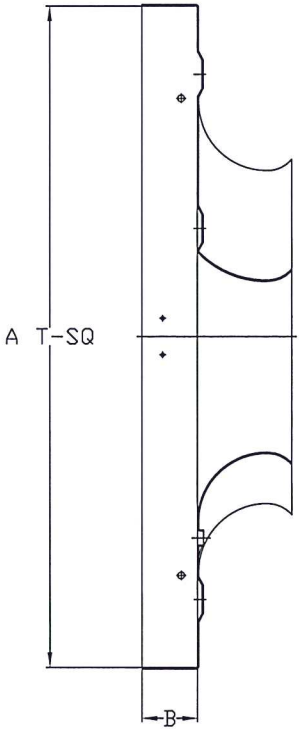

PRODUCT REVISED
as complying with the Florida Building Code
NOA-No. 23-0815.03
Expiration Date 11/13/2028
By
Miami-Dade Product Control

300	36	3	.080
270	36	3	.080
245	30	3	.080
UNIT	A	B	C
SIZE	T-SQUARE	DIM	DIM

JERRY TRAVIS MILLER- ENGINEER
FLORIDA LICENSE #89925
FLORIDA STATE CERTIFICATE
OF AUTHORITY #RY34386

JERRY TRAVIS MILLER
No 89925
STATE OF
FLORIDA
PROFESSIONAL ENGINEER
11/6/23

ALUMINUM: SY MIN=17KSI

MAT'L	3003-H14 AL. "C" THICK	
DRAWN	BFS	05/05/14
DESIGNER	BFS	SHEET 10 OF 12

DO NOT SCALE DRAWING
TOLERANCES UNLESS OTHERWISE NOTED

DECIMAL	FRACTIONAL
.XX=±.063"	≤12"=±1/16"
.XXX=±.010"	>12" THRU 96"=±1/8"
.XXXX=±.001"	>96" THRU 144"=±1/4"
	>144"=±3/8"
ANGULAR ±2°	(NC)=NO INSPECTION REQ'D

LOREN COOK CO.
MANUFACTURERS OF AIR MOVING EQUIPMENT
SPRINGFIELD, MISSOURI

ACRU/VCR/ACSC/ACW
POWER VENTILATOR
HURRICANE RATED

SIZE	DRAWING NO.	REV.
B	SD080171-12	G

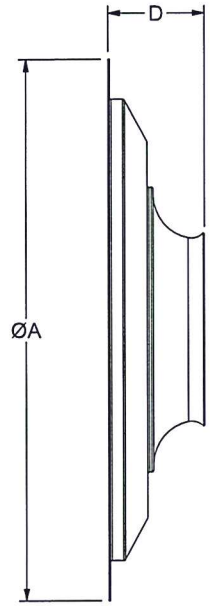

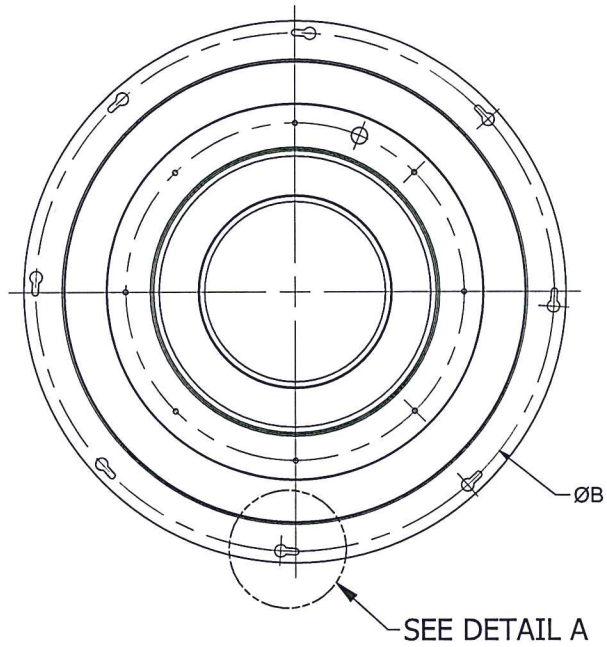

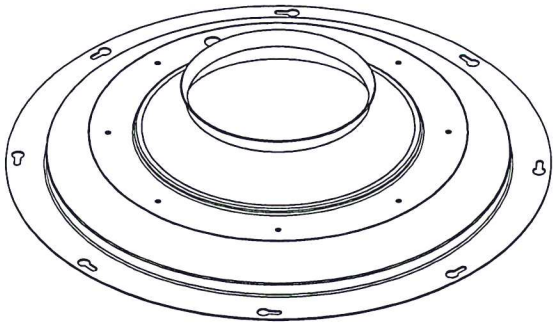

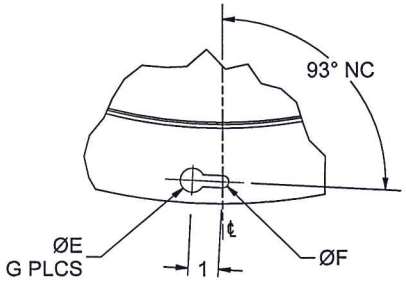

DETAIL A

245	45	43 1/2	.100 AL	0.810	0.410	8
225	41	39 1/2	.100 AL	0.810	0.410	8
210	41	39 1/2	.100 AL	0.810	0.410	8
195	36	34 1/2	.100 AL	0.810	0.410	8
180	36	34 1/2	.100 AL	0.810	0.410	8
165	30	28 1/2	.100 AL	0.810	0.410	8
150	30	28 1/2	.100 AL	0.810	0.410	8
135	25	23 1/2	.080 AL	0.810	0.410	4
120	25	23 1/2	.080 AL	0.810	0.410	4
100	21 1/4	19 3/4	.080 AL	0.810	0.410	4
90/100	21 1/4	19 3/4	.080 AL	0.813	0.406	4
70	15 1/2	14 1/4	.080 AL	0.813	0.406	4
UNIT	A	B	C	E.	F	G
SIZE	DIM	DIM	THICK	DIM	DIM	QTY

PRODUCT REVISED
as complying with the Florida Building Code
NOA-No. 23-0815.03
Expiration Date 11/13/2028
By
Miami-Dade Product Control

JERRY TRAVIS MILLER- ENGINEER
FLORIDA LICENSE #89925
FLORIDA STATE CERTIFICATE
OF AUTHORITY #RY34386

JERRY TRAVIS MILLER
No 89925
STATE OF
FLORIDA
PROFESSIONAL ENGINEER
11/6/23

ALUMINUM: SY MIN=15KSI WALL BASE

MAT'L	"C" THICK 1100-0 ALUM	
DRAWN	AGL	7/13/2017
DESIGNER	BFS	SHEET 11 OF 12

DO NOT SCALE DRAWING
TOLERANCES UNLESS OTHERWISE NOTED

DECIMAL	FRACTIONAL
.XX = ± .063" .XXX = ± .010" .XXXX = ± .001"	≤12" = ± 1/16" >12" THRU 96" = ± 1/8" >96 THRU 144" = ± 1/4" >144" = ± 3/8"
ANGULAR ± 2"	(NC) = NO INSPECTION REQ'D

LOREN COOK CO.
MANUFACTURERS OF AIR MOVING EQUIPMENT
SPRINGFIELD, MISSOURI

ACRU/VCR/ACSC/ACW
POWER VENTILATOR
HURRICANE RATED

SIZE	DRAWING NO.	REV.
B	SD080717-12	G

WALL MOUNT ACRU/VCR FASTENER TABLE 1		
UNIT SIZE	MINIMUM NUMBER OF FASTENERS PER SIDE TO ATTACH UNIT TO CURB	MINIMUM NUMBER OF FASTENERS PER SIDE TO ATTACH CURB TO WALL STRUCTURE 5/16 LAG OR OR 5/16-18 GRADE 2 HEX BOLT
70	5	5
80	5	5
90	5	5
100	5	5
120	5	6
135	5	6
150	6	7
165	6	7
180	8	8
195	8	8
210	8	9
225	8	9
245	8	10
270	9	10
300	9	14

ACW FASTENER TABLE 2 WALL MOUNT		
UNIT SIZE	BOLT SIZE	NUMBER OF BOLTS IN ROUND WALL BASE
70	3/8	4
90	3/8	4
100	3/8	4
101	3/8	4
120	3/8	4
135	3/8	4
150	3/8	8
165	3/8	8
180	3/8	8
195	3/8	8
210	3/8	8
225	3/8	8
245	3/8	8

NOTES:

1. THE ACRU/VCR POWER VENTILATOR SHALL BE ATTACHED TO THE CURB WITH ONE OF THE FOLLOWING METHODS INSTALLED ON ALL FOUR SIDES OF THE CURB CAP. THE FASTENER SHALL BE 2" FROM EACH CORNER OF THE FAN BASE. THE DISTANCE BETWEEN FASTENERS SHALL BE 5-1/2" OR LESS. THE QUANTITY OF FASTENERS INTO EACH CURB SIDE SHALL EQUAL OR EXCEED THE QUANTITY SHOWN IN THE FASTENER TABLE 1.

   A) #12 X 2" HEX WASHER HEAD SELF-DRILLING SCREW
   B) ALTERNATE FASTENERS- .25" HEX HEAD BOLT AND WASHER WITH COMPANION NUT INSTALLED ON THE INTERIOR OF THE CURB.

2. THE WALL CURB SHALL BE FASTENED TO THE WALL STRUCTURE USING THREADED FASTENERS IN THE QUANTITY INDICATED IN THE TABLE 1 ON SIDE OF THE CURB. THE MINIMUM NOMINAL DIAMETER OF THE THREADED FASTENERS SHALL BE 5/16" (5/16 LAG BOLT INTO WOOD OR 5/16-18 GRADE 2 BOLT INTO 1/8" STEEL) AND THESE FASTENERS SHALL BE INSTALLED AND TIGHTENED APPROPRIATE FOR THE WALL STRUCTURE.

3. THE ACW POWER VENTILATOR SHALL BE ATTACHED TO THE WALL STRUCTURE USING THE SIZE AND QUANTITY OF BOLTS INDICATED IN THE ACW FASTENER TABLE 2. THESE FASTENERS (3/8 LAG OR 3/8-16 GRADE 2 BOLT) SHALL BE INSTALLED WITH THE APPROPRIATE WASHER AND TIGHTENED AS REQUIRED FOR THE WALL STRUCTURE.

4. ALL FASTENERS ARE TO BE HIGH QUALITY CORROSION RESISTANT STEEL OR STAINLESS STEEL.

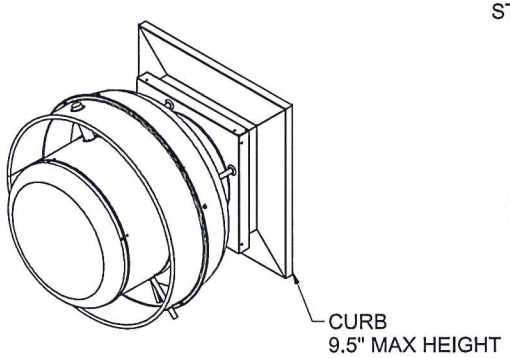

ACRU
SIZE 300 SHOWN

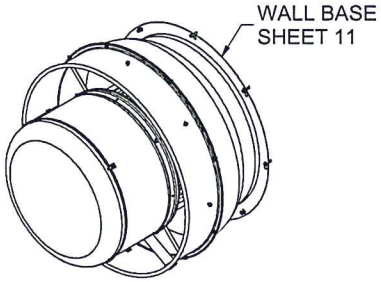

ACW
SIZE 245 SHOWN

PRODUCT REVISED
as complying with the Florida Building Code
NOA-No. 23-0815.03
Expiration Date 11/13/2028
By
Miami-Dade Product Control

JERRY TRAVIS MILLER- ENGINEER
FLORIDA LICENSE #89925
FLORIDA STATE CERTIFICATE
OF AUTHORITY #RY34386

JERRY TRAVIS MILLER
No 89925
STATE OF
FLORIDA
PROFESSIONAL ENGINEER
11/6/23

WALL MOUNT

MAT'L	-	
DRAWN	AGL	7/13/2017
DESIGNER	BFS	SHEET 12 OF 12

DO NOT SCALE DRAWING
TOLERANCES UNLESS OTHERWISE NOTED

DECIMAL	FRACTIONAL
.XX = ± .063"	≤12" = ± 1/16"
.XXX = ± .010"	>12" THRU 96" = ± 1/8"
.XXXX = ± .001"	>96 THRU 144" = ± 1/4"
	>144" = ± 3/8"
ANGULAR ± 2"	(NC) = NO INSPECTION REQ'D

LOREN COOK CO.
MANUFACTURERS OF AIR MOVING EQUIPMENT
SPRINGFIELD, MISSOURI

ACRU/VCR/ACSC/ACW
POWER VENTILATOR
HURRICANE RATED

SIZE	DRAWING NO.	REV.
B	SD080717-12	G

MIAMI-DADE COUNTY
PRODUCT CONTROL SECTION
11805 SW 26 Street, Room 208
Miami, Florida 33175-2474
T (786) 315-2590 F (786) 315-2599
www.miamidade.gov/building

DEPARTMENT OF REGULATORY AND ECONOMIC RESOURCES (RER)
BOARD AND CODE ADMINISTRATION DIVISION

NOTICE OF ACCEPTANCE (NOA)

Loren Cook Company
2015 E. Dale Street
Springfield, MO 65803

SCOPE: This NOA is being issued under the applicable rules and regulations governing the use of construction materials. The documentation submitted has been reviewed and accepted by Miami-Dade County RER-Product Control Section to be used in Miami Dade County and other areas where allowed by the Authority Having Jurisdiction (AHJ).

This NOA shall not be valid after the expiration date stated below. The Miami-Dade County Product Control Section (In Miami Dade County) and/or the AHJ (in areas other than Miami Dade County) reserve the right to have this product or material tested for quality assurance purposes. If this product or material fails to perform in the accepted manner, the manufacturer will incur the expense of such testing and the AHJ may immediately revoke, modify, or suspend the use of such product or material within their jurisdiction. RER reserves the right to revoke this acceptance if it is determined by Miami-Dade County Product Control Section that this product or material fails to meet the requirements of the applicable building code.

This product is approved as described herein and has been designed to comply with the Florida Building Code, including the High Velocity Hurricane Zone.

DESCRIPTION: Model ASP Steel Rooftop Fan

APPROVAL DOCUMENT: Drawing No. **SD080717-13**, titled "ASP-Supply Vent Sizes 90-200 Hurricane Rated", sheet 1 through 9 of 9, dated 09/19/13, with revision C dated 11/06/23, prepared by manufacturer, signed and sealed by Jerry Travis Miller, P.E. bearing the Miami-Dade County Product Control Revision stamp with the Notice of Acceptance number and expiration date by the Miami-Dade County Product Control Section.

MISSILE IMPACT RATING: Large and Small Missile Impact Resistant

LABELING: Each unit shall bear a permanent label with the manufacturer's name or logo, manufacturing address, model number, the positive and negative design pressure rating, indicate impact rated if applicable, installation instruction drawing reference number, approval number (NOA), the applicable test standards, and the statement reading 'Miami-Dade County Product Control Approved' is to be located on the door's side track, bottom angle, or inner surface of a panel.

RENEWAL of this NOA shall be considered after a renewal application has been filed and there has been no change in the applicable building code negatively affecting the performance of this product.

TERMINATION of this NOA will occur after the expiration date or if there has been a revision or change in the materials, use, and/or manufacture of the product or process. Misuse of this NOA as an endorsement of any product, for sales, advertising or any other purposes shall automatically terminate this NOA. Failure to comply with any section of this NOA shall be cause for termination and removal of NOA.

ADVERTISEMENT: The NOA number preceded by the words Miami-Dade County, Florida, and followed by the expiration date may be displayed in advertising literature. If any portion of the NOA is displayed, then it shall be done in its entirety.

INSPECTION: A copy of this entire NOA shall be provided to the user by the manufacturer or its distributors and shall be available for inspection at the job site at the request of the Building Official.

This NOA **revises and renews NOA No. 23-0821.02** and consists of this page 1 and evidence page E-1 and E-2, as well as approval document mentioned above.

The submitted documentation was reviewed by **Manuel Perez, P.E.**

MIAMI-DADE COUNTY APPROVED

10/03/24

NOA No. 24-0912.01
Expiration Date: November 13, 2029
Approval Date: October 10, 2024

Loren Cook Company.

NOTICE OF ACCEPTANCE: EVIDENCE SUBMITTED

1. EVIDENCE SUBMITTED UNDER PREVIOUS NOA's

A. DRAWINGS

1. Manufacturer's die drawings and sections.
   (Submitted under NOA No. 08-0904.04)
2. Drawing No. **SD080717-13**, titled "ASP Supply Vent Sizes 90-200 Hurricane Rated", sheets 1 through 9 of 9, dated 09/19/13, with revision **C** dated 11/06/23, prepared by manufacturer, signed and sealed by Jerry Travis Miller, P.E.
   (Submitted under NOA No. 23-0821.02)

B. TESTS

1. Test reports on: 1) Uniform Static Air Pressure Test, Loading per FBC TAS 202-94
   2) Large Missile Impact Test per FBC, TAS 201-94
   3) Cyclic Wind Pressure Loading per FBC, TAS 203-94
   along with marked-up drawings and installation diagram of Series/Model ASP, metal roof vent, prepared by Architectural Testing, Inc., Test Report No. **79143.01-801-18**, dated 03/03/08, signed and sealed by Jeffrey T. Kaminski, P.E.
   (Submitted under NOA No. 08-0904.04)

C. CALCULATIONS

1. Wind loads and anchor capacity calculations dated 06/12/12, prepared by manufacturer, signed and sealed by Bradley F. Skidmore, P.E.
   (Submitted under NOA No. 12-0814.12)

D. QUALITY ASSURANCE

1. Miami-Dade Department of Regulatory and Economic Resources (RER)

E. MATERIAL CERTIFICATIONS

1. None.

F. STATEMENTS

1. Statement letter of conformance, complying with **FBC 8th Edition (2023)** dated 07/28/23, issued by manufacturer, signed and sealed by Bradley F. Skidmore, P.E.
   (Submitted under NOA No. 23-0821.02)
2. Statement letter of no financial interest dated 11/10/23, issued by manufacturer, signed and sealed by Jerry Travis Miller, P.E.
   (Submitted under NOA No. 23-0821.02)
3. Testing contract notification dated 11/17/23, issued by manufacturer, signed by Cassandra Matthews.
   (Submitted under NOA No. 23-0821.02)

Manuel Perez

Manuel Perez, P.E.
Product Control Examiner
NOA No. 24-0912.01
Expiration Date: November 13, 2029
Approval Date: October 10, 2024

Loren Cook Company.

NOTICE OF ACCEPTANCE: EVIDENCE SUBMITTED

1. EVIDENCE SUBMITTED UNDER PREVIOUS NOA's (CONTINUED)

G. OTHERS

1. Notice of Acceptance No. **21-0405.06**, issued to Loren Cook Company for their Series ASP Steel Rooftop Fan, approved on 06/24/21 and expiring on 11/13/23.

2. NEW EVIDENCE SUBMITTED

A. DRAWINGS

1. None.

B. TESTS

1. Test reports on: 1) Uniform Static Air Pressure Test, Loading per FBC TAS 202-94
2) Large Missile Impact Test per FBC, TAS 201-94
3) Cyclic Wind Pressure Loading per FBC, TAS 203-94
along with marked-up drawings and installation diagram of Series/Model ASP, metal roof vent, prepared by Intertek, Test Report No. **07252.01-801-18 R0**, dated 03/08/24, signed and sealed by Tyler Westerling, P.E.

C. CALCULATIONS

1. None.

D. QUALITY ASSURANCE

1. Miami-Dade Department of Regulatory and Economic Resources (RER)

E. MATERIAL CERTIFICATIONS

1. None.

F. STATEMENTS

1. None.

G. OTHERS

1. Notice of Acceptance No. **23-0821.02**, issued to Loren Cook Company for their Series ASP Steel Rooftop Fan, approved on 12/28/23 and expiring on 11/13/24.

Manuel Perez

Manuel Perez, P.E.
Product Control Examiner
NOA No. 24-0912.01
Expiration Date: November 13, 2029
Approval Date: October 10, 2024

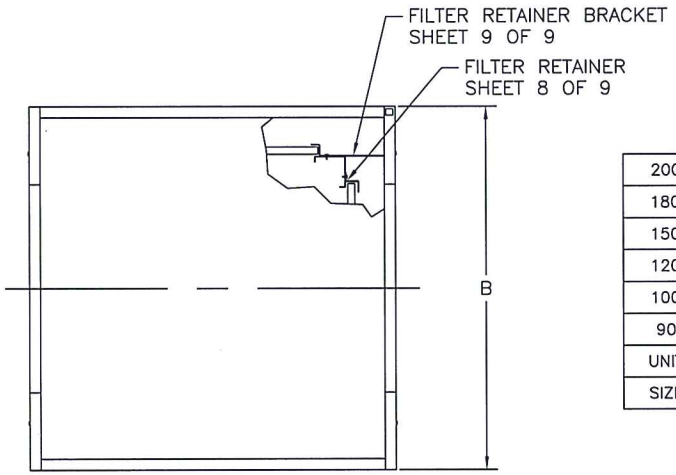

TOP VIEW

200	48–1/4	68	47–1/4	29	6
180	36–1/4	55–3/4	40–1/4	22–3/4	4
150	32–1/4	45–3/4	36–1/4	16–1/2	4
120	32–1/4	42–1/2	33–1/4	16–1/2	4
100	28–1/4	38–1/2	30	12–1/4	4
90	24–1/4	33–1/8	26–1/2	10–1/2	4
UNIT	DIM	DIM	DIM	DIM	DIM
SIZE	A	B	C	D	E

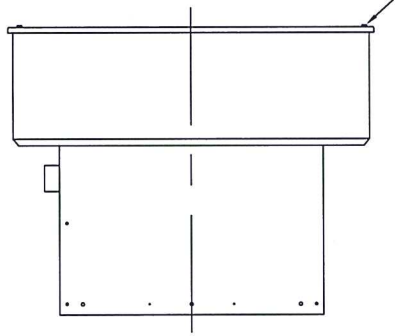

SIDE VIEW

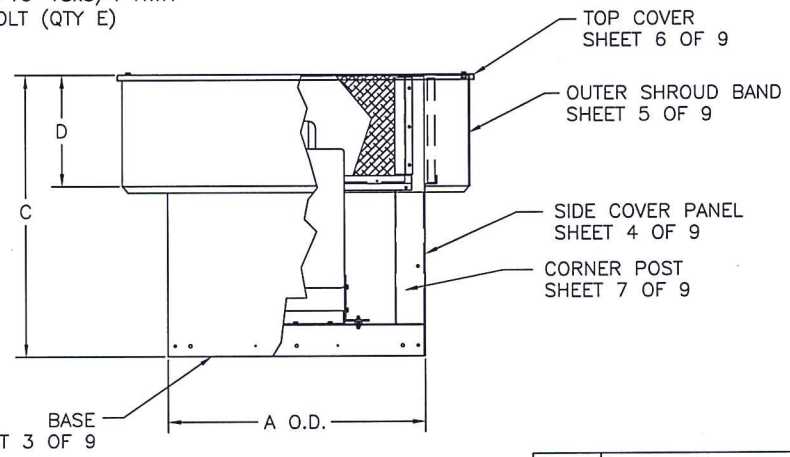

RIGHT SIDE VIEW

PRODUCT REVISED
As complying with the Florida Building Code
NOA-No. 24-0912.01
Expiration Date: 11/13/2029
By: Manuel Perez
Miami-Dade Product Control

PRODUCT REVISED
as complying with the Florida Building Code
NOA-No. 23-0821.02
Expiration Date 11/13/2024
By
Miami-Dade Product Control

JERRY TRAVIS MILLER- ENGINEER
FLORIDA LICENSE #89925
FLORIDA STATE CERTIFICATE
OF AUTHORITY #RY34386

JERRY TRAVIS MILLER
No 89925
STATE OF
FLORIDA
PROFESSIONAL ENGINEER
11/6/23

NOTES: DESIGN PRESSURE: +/– 70 PSF
IMPACT RATING: LARGE MISSILE IMPACT RESISTANT
DESIGN TESTING AND INSTALLATION CONFORMS TO FLORIDA BUILDING CODE
ALL DIMENSIONS IN INCHES

MAT'L	–	
DRAWN	BFS	9/19/13
DESIGNER	BFS	SHEET 1 OF 9

DO NOT SCALE DRAWING
TOLERANCES UNLESS OTHERWISE NOTED

DECIMAL	FRACTIONAL
.XX=±.063"	≤12"=±1/16"
.XXX=±.010"	>12" THRU 96"=±1/8"
.XXXX=±.001"	>96" THRU 144"=±1/4"
ANGULAR ±2°	>144"=±3/8"
	(NC)=NO INSPECTION REQ'D

LOREN COOK CO.
MANUFACTURERS OF AIR MOVING EQUIPMENT
SPRINGFIELD, MISSOURI

ASP–SUPPLY VENT
SIZES 90–200
HURRICANE RATED

SIZE	DRAWING NO.	REV.
B	SD080717–13	C

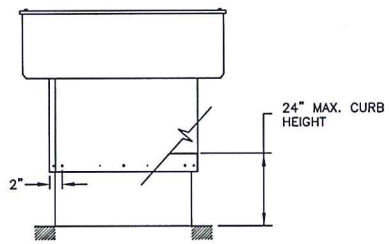

ATTACHMENT OF CURB TO ROOF STRUCTURE

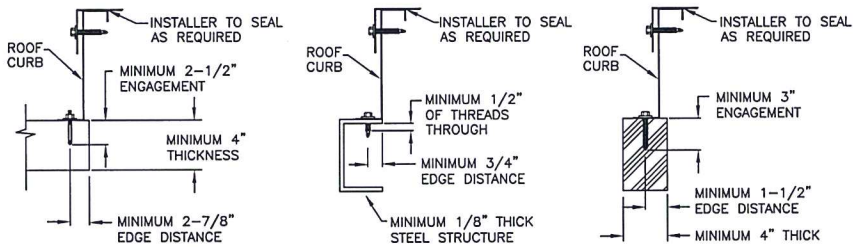

CONCRETE ROOF DECK	STEEL ROOF STRUCTURE	WOOD ROOF STRUCTURE
MINIMUM 2500PSI CONCRETE	A36 STEEL STRUCTURE MINIMUM Fy=36KSI	MIN. 4" NOMINAL THICK WOOD MIN SG = .42

FASTENER TABLE		
UNIT SIZE	MINIMUM NUMBER OF FASTENERS PER SIDE TO ATTACH UNIT TO CURB	MINIMUM NUMBER OF FASTENERS PER SIDE TO ATTACH CURB TO ROOF STRUCTURE
90	3	6
100	4	6
120	5	8
150	5	8
180	7	10
200	9	14

PRODUCT REVISED
As complying with the Florida Building Code
NOA-No. 24-0912.01
Expiration Date: 11/13/2029
By: Manuel Perez
Miami-Dade Product Control

PRODUCT REVISED
as complying with the Florida Building Code
NOA-No. 23-0821.02
Expiration Date 11/13/2024
By
Miami-Dade Product Control

NOTES:

1) ASP POWER VENTILATOR AS REFERRED TO HEREIN REFERS TO ALL LOREN COOK MODEL ASP SUPPLY VENTILATORS INCLUDING BOTH DIRECT DRIVE AND BELT DRIVE TYPE UNITS WHICH ARE CONSTRUCTED USING THE SAME G-90 GALVANIZED STEEL OUTER HOUSING COMPONENTS.
2) THIS APPROVAL IS FOR THE STRUCTURAL CAPACITY OF THE EXTERIOR HOUSING ONLY, IT DOES NOT INCLUDE ANY INTERIOR MECHANISM OR ELECTRICAL PART.
3) THIS PRODUCT HAS NOT BEEN TESTED FOR WATER PENETRATION ACCORDING TO FLORIDA BUILDING CODE TAS 100(A) WIND DRIVEN RAIN TEST. IT CANNOT BE INSTALLED WITHIN THE RIDGE AREA FBC 1523.6.5.2.13
4) UNIT IS TO INCLUDE A CURB CAP BASE TO FACILITATE MOUNTING OF THE UNIT TO A CURB. THE CURB WILL BE ADEQUATELY ATTACHED TO THE BUILDING STRUCTURE TO SUSTAIN ALL FORCES WHICH MAY BE PRODUCED BY THE PRESCRIBED ENVIROMENTAL FORCES EXERTED ON THE FAN AND CURB. THE CURB MUST BE ATTACHED TO A STRUCTURAL MEMBER OF THE BUILDING.

   CONCRETE DECK: CURB IS TO BE ATTACHED WITH WEDGE TYPE CONCRETE ANCHOR – MINIMUM 3/8" DIAMETER CARBON STEEL – HILTI KWIK BOLT 3 OR EQUAL. MINIMUM 2-1/2" OF ENGAGEMENT IN 2000 PSI MINIMUM CONCRETE. MINIMUM DECK THICKNESS IS 4" AND ANCHORS ARE MINIMUM 2-7/8" FROM EDGE. SEE TABLE FOR MINIMUM QUANTITY OF ANCHORS REQUIRED PER CURB SIDE.

   STEEL ROOF STRUCTURE: CURB IS TO BE ATTACHED WITH SELF-TAPPING STEEL SCREW OF MINIMUM NOMINAL SIZE OF 3/8" DIAMETER AND SCREW SHALL PASS THROUGH STEEL AT LEAST 1/2". THE SCREW MUST BE AT LEAST 2 SCREW DIAMETERS FROM MATERIAL EDGE. SEE TABLE FOR MINIMUM QUANTITY OF SCREWS REQUIRED PER CURB SIDE.

   WOOD ROOF STRUCTURE: CURB IS TO BE ATTACHED WITH STEEL LAG BOLTS NOMINAL SIZE OF 3/8" DIAMETER. WOOD IS TO BE 4" NOMINAL SIZE OR GREATER. THE BOLT SHALL HAVE A MINIMUM OF 3" OF THREAD ENGAGEMENT AND SHALL BE AT LEAST 1-1/2" FROM MATERIAL EDGE. SEE TABLE FOR MINIMUM QUANTITY OF BOLTS REQUIRED PER CURB SIDE.

5) THE CURB SHALL BE CONSTRUCTED OF 5052H-34 ALUMINUM OR G-90 GALVANIZED STEEL OR STAINLESS STEEL. THE CURB MATERIAL THICKNESS SHALL BE 18 GA (.0470") OR GREATER. THE CURB HEIGHT SHALL NOT EXCEED 24".
6) THE ASP POWER SUPPLY VENTILATOR SHALL BE ATTACHED TO THE CURB WITH ONE OF THE FOLLOWING METHODS INSTALLED ON ALL FOUR SIDES OF THE CURB CAP. THE FASTENERS SHALL BE 2" FROM EACH CORNER OF THE FAN BASE. THE QUANTITY OF FASTENERS INTO EACH CURB SIDE SHALL EQUAL OR EXCEED THE QUANTITY SHOWN IN THE FASTENER TABLE (AT LEFT).
   A) #12 X 2" HEX WASHER HEAD SELF-DRILLING SCREW
   B) ALTERNATE FASTENER – .25" HEX HEAD BOLT AND WASHER WITH COMPANION NUT INSTALLED ON THE INTERIOR OF THE CURB.
7) ALL FASTENERS ARE TO BE HIGH QUALITY CORROSION RESISTANT STEEL OR STAINLESS STEEL.
8) ANY GAP BETWEEN THE CURB AND CURB CAP SHALL BE FILLED BY THE INSTALLING CONTRACTOR WITH A SUITABLE CORROSION RESISTANT MATERIAL THAT ALLOWS THE FASTENERS TO BE INSTALLED WITHOUT CAUSING EXCESSIVE DISTORTION OF THE UNIT FLANGES.
9) THE INSTALLER IS RESPONSIBLE FOR CHECKING THAT ALL FASTENERS ARE PROPERLY INSTALLED AND ALL ACCESS PANELS ARE IN PLACE BEFORE PUTTING THE UNIT INTO SERVICE.
10) ALL FASTENERS AND ACCESS PANELS MUST BE PROPERLY INSTALLED AFTER MAINTENANCE OPERATIONS FOR UNIT TO MAINTAIN CODE COMPLIANCE.

JERRY TRAVIS MILLER- ENGINEER
FLORIDA LICENSE #89925
FLORIDA STATE CERTIFICATE
OF AUTHORITY #RY34386

JERRY TRAVIS MILLER
No 89925
STATE OF FLORIDA
PROFESSIONAL ENGINEER
11/16/23

MAT'L	–	
DRAWN	BFS	09/19/13
DESIGNER	BFS	SHEET 2 OF 9

DO NOT SCALE DRAWING

TOLERANCES UNLESS OTHERWISE NOTED

DECIMAL	FRACTIONAL
.XX=±.063" .XXX=±.010" .XXXX=±.001"	≤12"=±1/16" >12" THRU 96"=±1/8" >96" THRU 144"=±1/4" >144"=±3/8"
ANGULAR ±2°	(NC)=NO INSPECTION REQ'D

LOREN COOK CO.
MANUFACTURERS OF AIR MOVING EQUIPMENT
SPRINGFIELD, MISSOURI

ASP-SUPPLY VENT
SIZES 90-200
HURRICANE RATED

SIZE	DRAWING NO.	REV.
B	SD080717-13	C

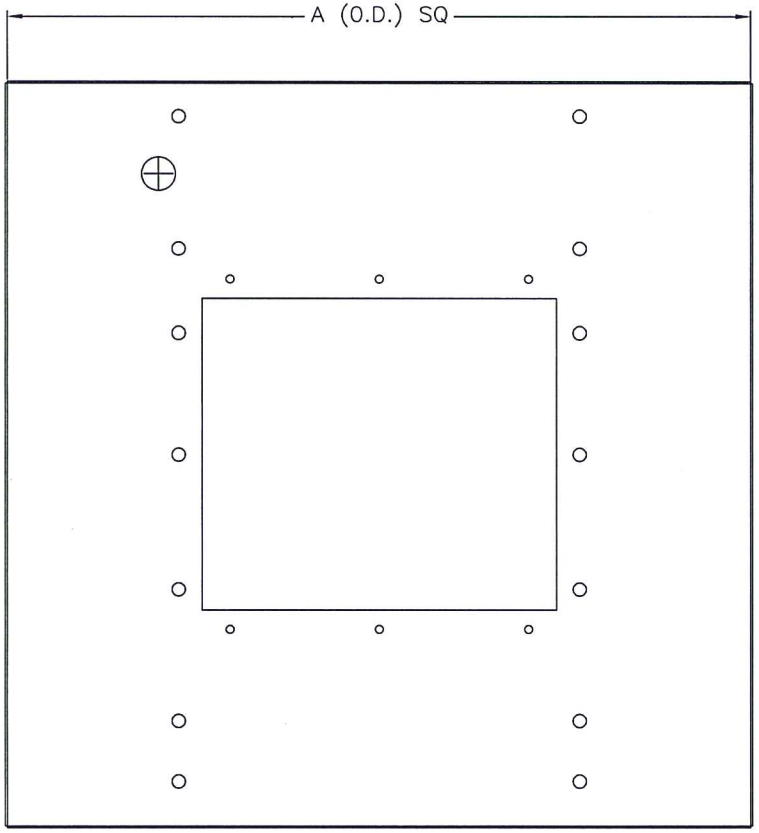

FORMED BOTTOM VIEW

FORMED SIDE VIEW

200	48-1/4
180	36-1/4
150	32-1/4
120	32-1/4
100	28-1/4
90	24-1/4
UNIT	A
SIZE	DIM

PRODUCT REVISED
As complying with the Florida Building Code
NOA-No. 24-0912.01
Expiration Date: 11/13/2029
By: Manuel Perez
Miami-Dade Product Control

PRODUCT REVISED
as complying with the Florida Building Code
NOA-No. 23-0821.02
Expiration Date 11/13/2024
By [illegible]
Miami-Dade Product Control

JERRY TRAVIS MILLER- ENGINEER
FLORIDA LICENSE #89925
FLORIDA STATE CERTIFICATE
OF AUTHORITY #RY34386

JERRY TRAVIS MILLER
No 89925
STATE OF
FLORIDA
PROFESSIONAL ENGINEER
11/6/23

MAT'L	16 GA G-90 GALV STEEL	
DRAWN	BFS	09/19/13
DESIGNER	BFS	SHEET 3 OF 9

DO NOT SCALE DRAWING
TOLERANCES UNLESS OTHERWISE NOTED

DECIMAL	FRACTIONAL
.XX=±.063"	≤12"=±1/16"
.XXX=±.010"	>12" THRU 96"=±1/8"
.XXXX=±.001"	>96" THRU 144"=±1/4"
	>144"=±3/8"
ANGULAR ±2°	(NC)=NO INSPECTION REQ'D

LOREN COOK CO.
MANUFACTURERS OF AIR MOVING EQUIPMENT
SPRINGFIELD, MISSOURI

ASP-SUPPLY VENT
SIZES 90-200
HURRICANE RATED

SIZE	DRAWING NO.	REV.
B	SD080717-13	C

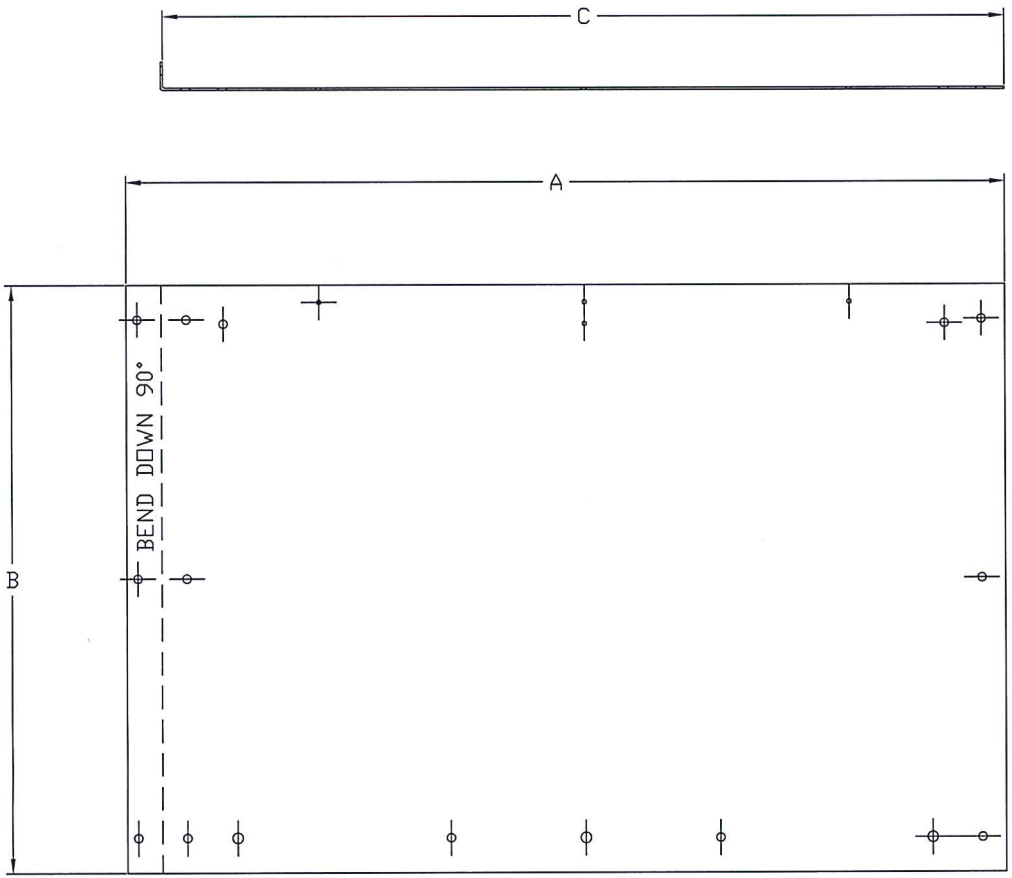

SIZE 9 SHOWN

20	49–9/32	20–1/4	48–9/32
18	37–9/32	21	36–9/32
15	33–9/32	21	32–9/32
12	33–9/32	18	32–9/32
10	29–9/32	18–3/4	28–9/32
9	25–9/32	17	24–9/32
UNIT	A	B	C
SIZE	DIM	DIM	DIM

PRODUCT REVISED
As complying with the Florida Building Code
NOA-No. 24-0912.01
Expiration Date: 11/13/2029
By: Manuel Perez
Miami-Dade Product Control

PRODUCT REVISED
as complying with the Florida Building Code
NOA-No. 23-0821.02
Expiration Date 11/13/2024
By
Miami-Dade Product Control

JERRY TRAVIS MILLER- ENGINEER
FLORIDA LICENSE #89925
FLORIDA STATE CERTIFICATE
OF AUTHORITY #RY34386

JERRY TRAVIS MILLER
No 89925
STATE OF
FLORIDA
PROFESSIONAL ENGINEER
11/6/23

MAT'L	18 GA. G-90 GALV STEEL	
DRAWN	BFS	09/19/13
DESIGNER	BFS	SHEET 4 OF 9

DO NOT SCALE DRAWING

TOLERANCES UNLESS OTHERWISE NOTED

DECIMAL	FRACTIONAL
.XX=±.063"	≤12"=±1/16"
.XXX=±.010"	>12" THRU 96"=±1/8"
.XXXX=±.001"	>96" THRU 144"=±1/4"
ANGULAR ±2°	>144"=±3/8"
	(NC)=NO INSPECTION REQ'D

LOREN COOK CO.
MANUFACTURERS OF AIR MOVING EQUIPMENT
SPRINGFIELD, MISSOURI

ASP–SUPPLY VENT
SIZES 90–200
HURRICANE RATED

SIZE	DRAWING NO.	REV.
B	SD080717–13	C

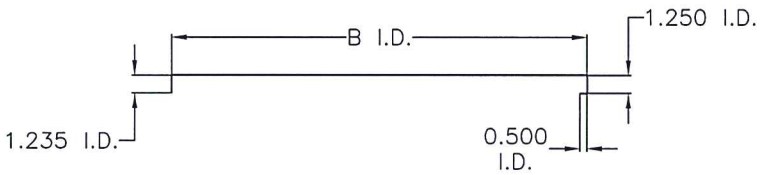

SECTION VIEW A–A

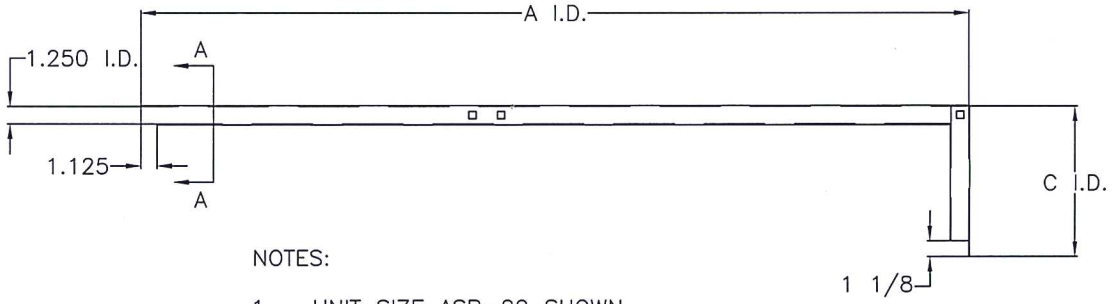

NOTES:

1 UNIT SIZE ASP–20 SHOWN

200	58–1/8	29	10–5/8
180	46–1/8	22–3/4	10–1/2
150	39–1/8	16–1/2	7–1/2
120	37	16–1/2	6–3/8
100	33	12–1/4	6–3/8
90	28–5/16	10–1/2	5–11/16
UNIT	A	B	C
SIZE	DIM	DIM	DIM

PRODUCT REVISED
As complying with the Florida Building Code
NOA-No. 24-0912.01
Expiration Date: 11/13/2029
By: Manuel Perez
Miami-Dade Product Control

PRODUCT REVISED
as complying with the Florida Building Code
NOA-No. 23-0821.02
Expiration Date 11/13/2024
By
Miami-Dade Product Control

JERRY TRAVIS MILLER- ENGINEER
FLORIDA LICENSE #89925
FLORIDA STATE CERTIFICATE
OF AUTHORITY #RY34386

JERRY TRAVIS MILLER
No 89925
STATE OF
FLORIDA
PROFESSIONAL ENGINEER
11/6/23

MAT'L	18 GA. G–90 GALV. STEEL	
DRAWN	BFS	09/19/13
DESIGNER	BFS	SHEET 5 OF 9

DO NOT SCALE DRAWING
TOLERANCES UNLESS OTHERWISE NOTED

DECIMAL	FRACTIONAL
.XX=±.063"	≤12"=±1/16"
.XXX=±.010"	>12" THRU 96"=±1/8"
.XXXX=±.001"	>96" THRU 144"=±1/4"
ANGULAR ±2°	>144"=±3/8"
	(NC)=NO INSPECTION REQ'D

LOREN COOK CO.
MANUFACTURERS OF AIR MOVING EQUIPMENT
SPRINGFIELD, MISSOURI

ASP–SUPPLY VENT
SIZES 90–200
HURRICANE RATED

SIZE	DRAWING NO.	REV.
B	SD080717–13	C

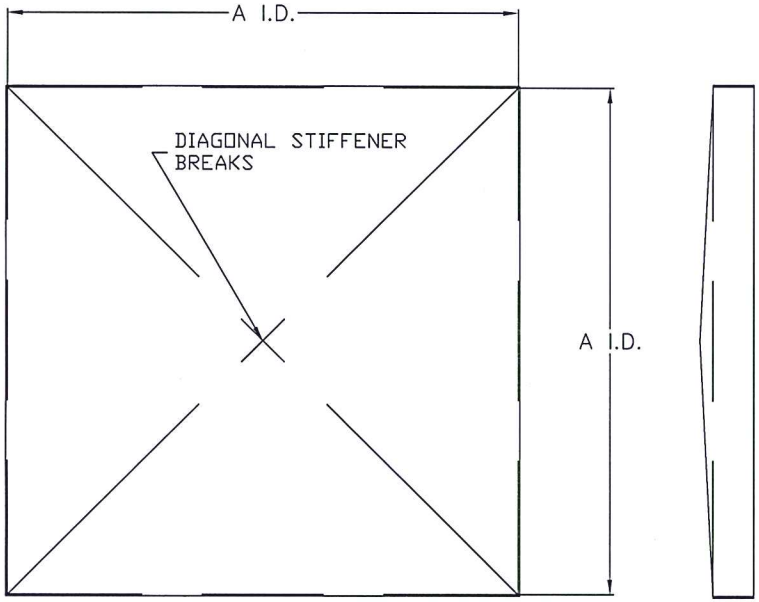

1 PIECE SIZE 90–180

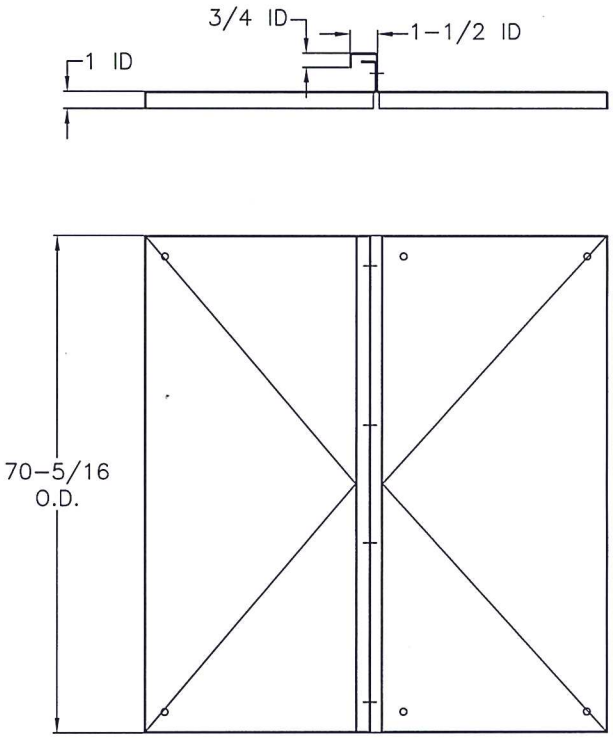

2 PIECE SIZE 200

200	49–3/16
180	37–3/16
120	33
100	29
90	25
UNIT	A
SIZE	DIM

PRODUCT REVISED
As complying with the Florida Building Code
NOA-No. 24-0912.01
Expiration Date: 11/13/2029
By: Manuel Perez
Miami-Dade Product Control

PRODUCT REVISED
as complying with the Florida Building Code
NOA-No. 23-0821.02
Expiration Date 11/13/2024
By [illegible]
Miami-Dade Product Control

JERRY TRAVIS MILLER- ENGINEER
FLORIDA LICENSE #89925
FLORIDA STATE CERTIFICATE
OF AUTHORITY #RY34386

JERRY TRAVIS MILLER
No 89925
STATE OF
FLORIDA
PROFESSIONAL ENGINEER
11/6/23

MAT'L	18 GA. G-90 GALV STL	
DRAWN	BFS	09/19/13
DESIGNER	BFS	SHEET 6 OF 9

DO NOT SCALE DRAWING
TOLERANCES UNLESS OTHERWISE NOTED

DECIMAL	FRACTIONAL
.XX=±.063"	≤12"=±1/16"
.XXX=±.010"	>12" THRU 96"=±1/8"
.XXXX=±.001"	>96" THRU 144"=±1/4"
ANGULAR ±2'	>144"=±3/8"

(NC)=NO INSPECTION REQ'D

LOREN COOK CO.
MANUFACTURERS OF AIR MOVING EQUIPMENT
SPRINGFIELD, MISSOURI

ASP–SUPPLY VENT
SIZES 90–200
HURRICANE RATED

SIZE	DRAWING NO.	REV.
B	SD080717–13	C

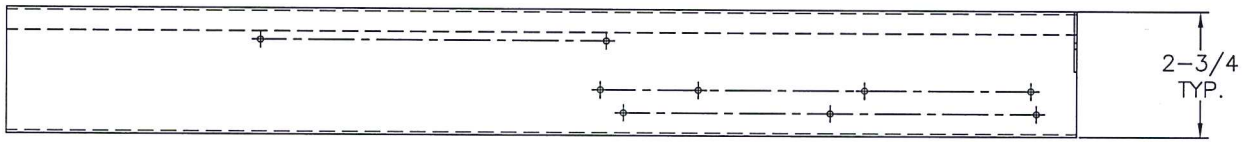

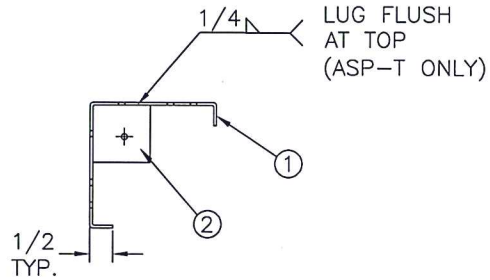

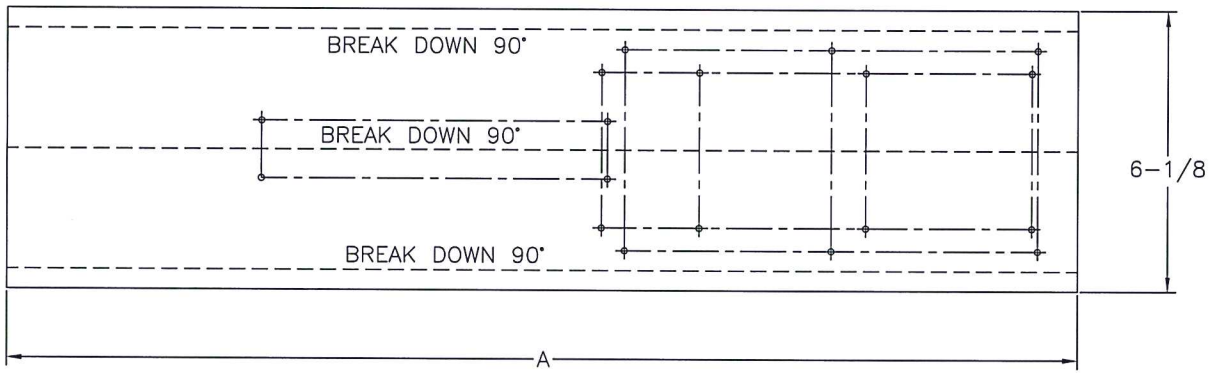

ITEM 1

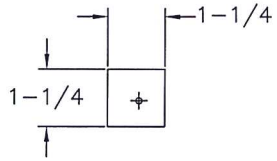

ITEM 2

PRODUCT REVISED
As complying with the Florida Building Code
NOA-No. 24-0912.01
Expiration Date: 11/13/2029
By: Manuel Perez
Miami-Dade Product Control

PRODUCT REVISED
as complying with the Florida Building Code
NOA-No. 23-0821.02
Expiration Date 11/13/2024
By
Miami-Dade Product Control

JERRY TRAVIS MILLER- ENGINEER
FLORIDA LICENSE #89925
FLORIDA STATE CERTIFICATE
OF AUTHORITY #RY34386

JERRY TRAVIS MILLER
No 89925
STATE OF
FLORIDA
PROFESSIONAL ENGINEER
11/6/23

200	56-3/4
180	45-3/4
150	36-1/2
120	34
100	27-3/4
90	24-1/4
UNIT	A
SIZE	DIM

NOTES:
1. UNIT SIZE 9 SHOWN.

MAT'L	16 GA. G-90 GALV STL	
DRAWN	BFS	09/19/13
DESIGNER	BFS	SHEET 7 OF 9

DO NOT SCALE DRAWING
TOLERANCES UNLESS OTHERWISE NOTED

DECIMAL	FRACTIONAL
.XX=±.063"	≤12"=±1/16"
.XXX=±.010"	>12" THRU 96"=±1/8"
.XXXX=±.001"	>96" THRU 144"=±1/4"
ANGULAR ±2°	>144"=±3/8"
	(NC)=NO INSPECTION REQ'D

LOREN COOK CO.
MANUFACTURERS OF AIR MOVING EQUIPMENT
SPRINGFIELD, MISSOURI

ASP-SUPPLY VENT
SIZES 90-200
HURRICANE RATED

SIZE	DRAWING NO.	REV.
B	SD080717-13	C

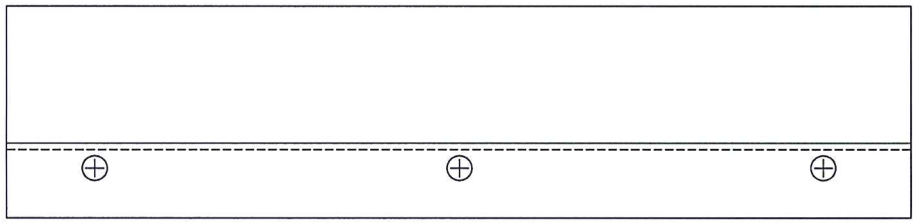

SIZE 9 SHOWN

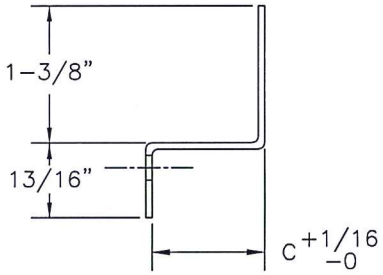

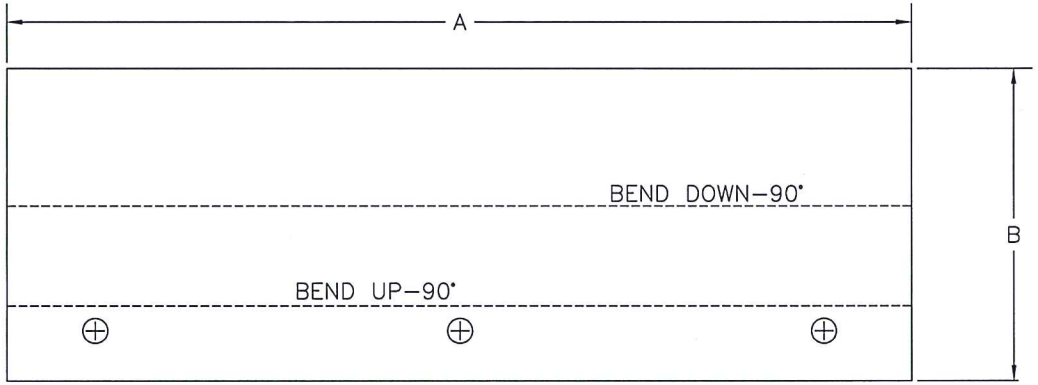

200	26-1/2	3-5/32	1-1/32	4-5/32	2-1/32
180	18-3/4	3-5/32	1-1/32	4-5/32	2-1/32
120	14-3/4	3-5/32	1-1/32	4-5/32	2-1/32
100	10-3/4	3-5/32	1-1/32	4-5/32	2-1/32
90	9	3-5/32	1-1/32	4-5/32	2-1/32
SIZE	DIM	B	C	B	C
UNIT	A	1" FILTER		2" FILTER	

PRODUCT REVISED
As complying with the Florida Building Code
NOA-No. 24-0912.01
Expiration Date: 11/13/2029
By: Manuel Perez
Miami-Dade Product Control

PRODUCT REVISED
as complying with the Florida Building Code
NOA-No. 23-0821.02
Expiration Date 11/13/2024
By
Miami-Dade Product Control

JERRY TRAVIS MILLER- ENGINEER
FLORIDA LICENSE #89925
FLORIDA STATE CERTIFICATE
OF AUTHORITY #RY34386

JERRY TRAVIS MILLER
No 89925
STATE OF
FLORIDA
PROFESSIONAL ENGINEER
11/6/23

MAT'L	18 GA. G-90 GALV. STL	
DRAWN	BFS	09/19/13
DESIGNER	BFS	SHEET 8 OF 9

DO NOT SCALE DRAWING

TOLERANCES UNLESS OTHERWISE NOTED

DECIMAL	FRACTIONAL
.XX=±.063"	≤12"=±1/16"
.XXX=±.010"	>12" THRU 96"=±1/8"
.XXXX=±.001"	>96" THRU 144"=±1/4"
	>144"=±3/8"
ANGULAR ±2°	(NC)=NO INSPECTION REQ'D

LOREN COOK CO.
MANUFACTURERS OF AIR MOVING EQUIPMENT
SPRINGFIELD, MISSOURI

ASP-SUPPLY VENT
SIZES 90-200
HURRICANE RATED

SIZE	DRAWING NO.	REV.
B	SD080717-13	C

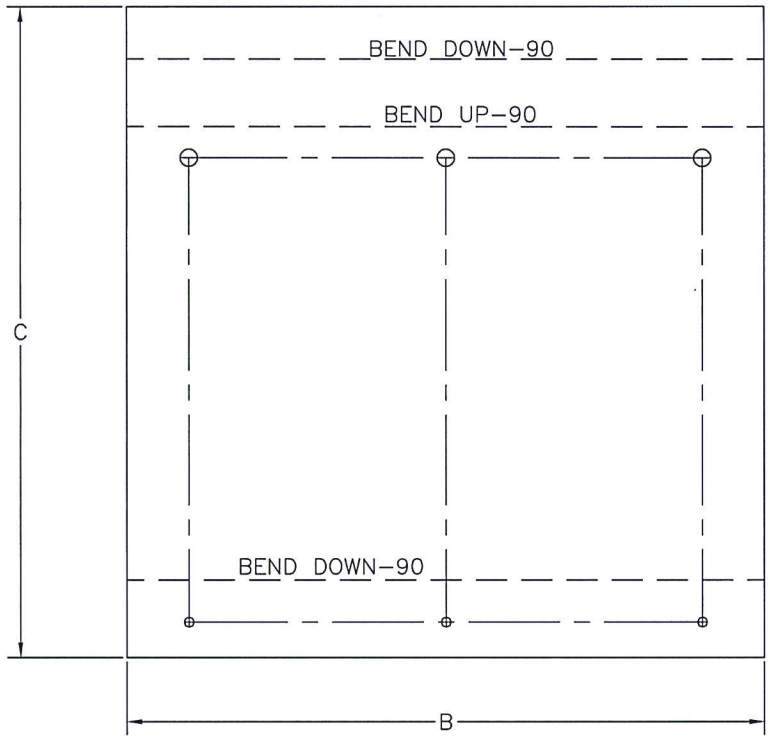

SIZE 9 SHOWN

200	11.94	26–1/2	14–5/8	15–5/8	1.03	2.03
180	11.81	18–3/4	14–1/2	15–1/2	1.03	2.03
150	8.81	14–3/4	11–1/2	12–1/2	1.03	2.03
120	7.19	14–3/4	9–7/8	10–7/8	1.03	2.03
100	7.19	10–3/4	9–7/8	10–7/8	1.03	2.03
90	6.50	9	9–3/16	10–3/16	1.03	2.03
UNIT	A	B	C	C	D	D
SIZE	DIM	DIM	1"FILTER	2"FILTER	1"FILTER	2"FILTER

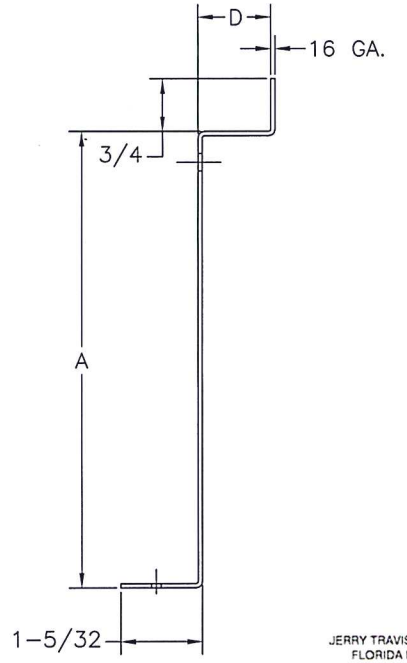

PRODUCT REVISED
As complying with the Florida Building Code
NOA-No. 24-0912.01
Expiration Date: 11/13/2029
By: Manuel Perez
Miami-Dade Product Control

PRODUCT REVISED
as complying with the Florida Building Code
NOA-No. 23-0821.02
Expiration Date 11/13/2024
By
Miami-Dade Product Control

JERRY TRAVIS MILLER- ENGINEER
FLORIDA LICENSE #89925
FLORIDA STATE CERTIFICATE
OF AUTHORITY #RY34386

JERRY TRAVIS MILLER
No 89925
STATE OF
FLORIDA
PROFESSIONAL ENGINEER
11/6/23

MAT'L	16 GA. G–90 GALV.	
DRAWN	BFS	09/19/13
DESIGNER	BFS	SHEET 9 OF 9

DO NOT SCALE DRAWING
TOLERANCES UNLESS OTHERWISE NOTED

DECIMAL	FRACTIONAL
.XX=±.063"	≤12"=±1/16"
.XXX=±.010"	>12" THRU 96"=±1/8"
.XXXX=±.001"	>96" THRU 144"=±1/4"
ANGULAR ±2°	>144"=±3/8"

(NC)=NO INSPECTION REQ'D

LOREN COOK CO.
MANUFACTURERS OF AIR MOVING EQUIPMENT
SPRINGFIELD, MISSOURI

ASP–SUPPLY VENT
SIZES 90–200
HURRICANE RATED

SIZE	DRAWING NO.	REV.
B	SD080717–13	C

MIAMI-DADE COUNTY
PRODUCT CONTROL SECTION
11805 SW 26 Street, Room 208
Miami, Florida 33175-2474
T (786) 315-2590 F (786) 315-2599
www.miamidade.gov/building

DEPARTMENT OF REGULATORY AND ECONOMIC RESOURCES (RER)
BOARD AND CODE ADMINISTRATION DIVISION

NOTICE OF ACCEPTANCE (NOA)

Loren Cook Company
2015 E. Dale Street
Springfield, MO 65803

SCOPE: This NOA is being issued under the applicable rules and regulations governing the use of construction materials. The documentation submitted has been reviewed and accepted by Miami-Dade County RER-Product Control Section to be used in Miami Dade County and other areas where allowed by the Authority Having Jurisdiction (AHJ).

This NOA shall not be valid after the expiration date stated below. The Miami-Dade County Product Control Section (In Miami Dade County) and/or the AHJ (in areas other than Miami Dade County) reserve the right to have this product or material tested for quality assurance purposes. If this product or material fails to perform in the accepted manner, the manufacturer will incur the expense of such testing and the AHJ may immediately revoke, modify, or suspend the use of such product or material within their jurisdiction. RER reserves the right to revoke this acceptance if it is determined by Miami-Dade County Product Control Section that this product or material fails to meet the requirements of the applicable building code.

This product is approved as described herein and has been designed to comply with the Florida Building Code, including the High Velocity Hurricane Zone.

DESCRIPTION: Model "CP with Inlet Box and Curb Cap" Steel Rooftop Fan

APPROVAL DOCUMENT: Drawing No. **SD080717-10**, titled "CP Fan with Inlet Box and Curb Cap Hurricane Rated", sheets 1 through 11 of 11, dated 09/05/13, with revision **C** dated 07/21/23, prepared by manufacturer, signed and sealed by Jerry Travis Miller, P.E. bearing the Miami-Dade County Product Control Revision stamp with the Notice of Acceptance number and expiration date by the Miami-Dade County Product Control Section.

MISSILE IMPACT RATING: Large and Small Missile Impact Resistant

LABELING: Each unit shall bear a permanent label with the manufacturer's name or logo, manufacturing address, model number, the positive and negative design pressure rating, indicate impact rated if applicable, installation instruction drawing reference number, approval number (NOA), the applicable test standards, and the statement reading 'Miami-Dade County Product Control Approved' is to be located on the door's side track, bottom angle, or inner surface of a panel.

RENEWAL of this NOA shall be considered after a renewal application has been filed and there has been no change in the applicable building code negatively affecting the performance of this product.

TERMINATION of this NOA will occur after the expiration date or if there has been a revision or change in the materials, use, and/or manufacture of the product or process. Misuse of this NOA as an endorsement of any product, for sales, advertising or any other purposes shall automatically terminate this NOA. Failure to comply with any section of this NOA shall be cause for termination and removal of NOA.

ADVERTISEMENT: The NOA number preceded by the words Miami-Dade County, Florida, and followed by the expiration date may be displayed in advertising literature. If any portion of the NOA is displayed, then it shall be done in its entirety.

INSPECTION: A copy of this entire NOA shall be provided to the user by the manufacturer or its distributors and shall be available for inspection at the job site at the request of the Building Official.

This NOA **revises and renews NOA No. 23-0821.04** and consists of this page 1 and evidence pages E-1, E-2 and E-3, as well as approval document mentioned above.

The submitted documentation was reviewed by **Manuel Perez, P.E.**

MIAMI-DADE COUNTY APPROVED

10/04/24

NOA No. 24-0912.03
Expiration Date: October 02, 2029
Approval Date: October 10, 2024

Loren Cook Company.

NOTICE OF ACCEPTANCE: EVIDENCE SUBMITTED

1. EVIDENCE SUBMITTED UNDER PREVIOUS NOA's

A. DRAWINGS

1. Manufacturer's die drawings and sections.
   (Submitted under NOA No. 08-0424.02)
2. Drawing No. **SD080717-10**, titled "CP Fan with Inlet Box and Curb Cap Hurricane Rated", sheets 1 through 11 of 11, dated 09/05/13, with revision **C** dated 07/21/23, prepared by manufacturer, signed and sealed by Jerry Travis Miller, P.E.
   (Submitted under NOA No. 23-0821.04)

B. TESTS

1. Addendum letter for Test Report No. **NCTL-210-3416-2**, dated 11/03/09, signed and sealed by Gerard J. Ferrara, P.E.
   (Submitted under NOA No. 09-0921.06)
2. Test reports on: 1) Uniform Static Air Pressure Test, Loading per FBC TAS 202-94
   2) Large Missile Impact Test per FBC, TAS 201-94
   3) Cyclic Wind Pressure Loading per FBC, TAS 203-94
   along with marked-up drawings and installation diagram of 245 centrifugal plenum blowers with inlet box and curb cap exhaust ventilator, prepared by National Certified Testing Laboratories, Test Report No. **NCTL-210-3416-2**, dated 02/07/08 and addendum letter dated 11/03/09, both signed and sealed by Gerard J. Ferrara, P.E.
   (Submitted under NOA No. 08-0424.02)

C. CALCULATIONS

1. Wind loads and anchor capacity calculations dated 09/11/13, prepared by manufacturer, signed and sealed by Bradley F. Skidmore, P.E.
   (Submitted under NOA No. 13-0708.10)

D. QUALITY ASSURANCE

1. Miami-Dade Department of Regulatory and Economic Resources (RER)

E. MATERIAL CERTIFICATIONS

1. None.

Manuel Perez

Manuel Perez, P.E.
Product Control Examiner
NOA No. 24-0912.03
Expiration Date: October 02, 2029
Approval Date: October 10, 2024

1. EVIDENCE SUBMITTED UNDER PREVIOUS NOA's (CONTINUED)

F. STATEMENTS

1. Statement letter of conformance, complying with **FBC 8th Edition (2023)** dated 07/28/23, issued by manufacturer, signed and sealed by Jerry Travis Miller, P.E.
   (Submitted under NOA No. 23-0821.04)
2. Statement letter of no financial interest dated 10/12/23, issued by manufacturer, signed and sealed by Jerry Travis Miller, P.E.
   (Submitted under NOA No. 23-0821.04)
3. Testing contract notification issued by Intertek, dated 09/28/23, signed by Cassandra Matthews.
   (Submitted under NOA No. 23-0821.04)

G. OTHERS

1. Notice of Acceptance No. **21-0405.08**, issued to Loren Cook Company for their Model "CP with Inlet Box and Curb Cap" Steel Roof Fan – L.M.I., approved on 06/24/21 and expiring on 10/02/23.

Manuel Perez

Manuel Perez, P.E.
Product Control Examiner
NOA No. 24-0912.03
Expiration Date: October 02, 2029
Approval Date: October 10, 2024

Loren Cook Company.

NOTICE OF ACCEPTANCE: EVIDENCE SUBMITTED

2. NEW EVIDENCE SUBMITTED

A. DRAWINGS

1. None.

B. TESTS

1. Test reports on: 1) Uniform Static Air Pressure Test, Loading per FBC TAS 202-94
2) Large Missile Impact Test per FBC, TAS 201-94
3) Cyclic Wind Pressure Loading per FBC, TAS 203-94
along with marked-up drawings and installation diagram of Series/Model 120 CP Fan with Inlet Box and Curb Cap, metal roof vent, prepared by Intertek, Test Report No. **Q5866.01-801-18 R0**, dated 03/08/24, signed and sealed by Tyler Westerling, P.E.

C. CALCULATIONS

1. None.

D. QUALITY ASSURANCE

1. Miami-Dade Department of Regulatory and Economic Resources (RER)

E. MATERIAL CERTIFICATIONS

1. None.

F. STATEMENTS

1. None.

G. OTHERS

1. Notice of Acceptance No. **23-0821.04**, issued to Loren Cook Company for their Model "CP with Inlet Box and Curb Cap" Steel Roof Fan, approved on 11/09/23 and expiring on 10/02/24.

Manuel Perez

Manuel Perez, P.E.
Product Control Examiner
NOA No. 24-0912.03
Expiration Date: October 02, 2029
Approval Date: October 10, 2024

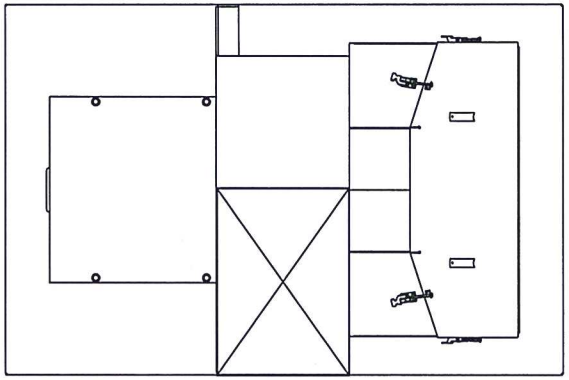

245	53 3/8	31 5/8	29 5/8	75 1/2	51 1/2
225	49 5/8	29	27	72 1/2	49 1/2
210	47 3/8	27 3/8	25 3/8	69 1/2	47 1/2
195	43 1/2	25 11/16	23 11/16	66 1/2	43 1/2
180	41 11/16	24 1/16	22 1/16	60 1/2	40 1/2
165	38 13/16	22 7/16	20 7/16	58 1/2	38 1/2
150	36 3/8	21 1/2	19 1/2	55 1/2	36 1/2
135	33 7/8	20	18	53 1/2	33 1/2
120	33 3/8	20	18	48 1/2	31 1/2
100	32 3/4	20	18	47 1/2	31 1/2
80	32 3/4	20	18	47 1/2	31 1/2
70	32 3/4	20	18	47 1/2	31 1/2
60	32 3/4	20	18	47 1/2	31 1/2
UNIT	A	B	C	D	E
SIZE	DIM	DIM	DIM	DIM	DIM

PRODUCT REVISED
As complying with the Florida Building Code
NOA-No. 24-0912.03
Expiration Date: 10/02/2029
By: Manuel Perez
Miami-Dade Product Control

PRODUCT REVISED
as complying with the Florida Building Code
NOA-No. 23-0821.04
Expiration Date 10/02/2024
By
Miami-Dade Product Control

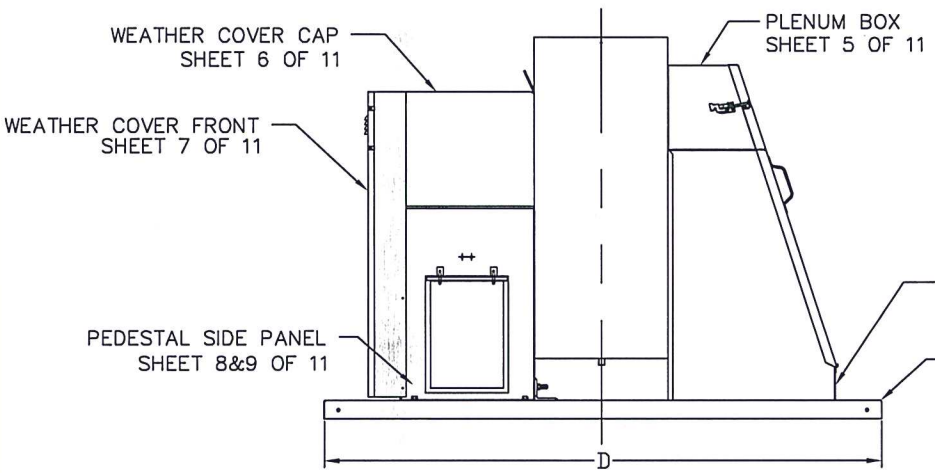

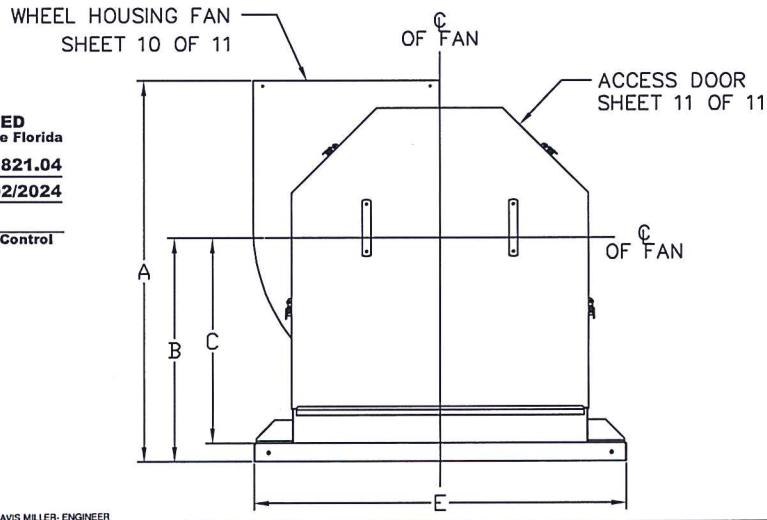

NOTE:
DESIGN PRESSURE: +/- 45 PSF
IMPACT RATING: LARGE MISSILE IMPACT RESISTANT
ALL DIMENSIONS IN INCHES

JERRY TRAVIS MILLER- ENGINEER
FLORIDA LICENSE #89925
FLORIDA STATE CERTIFICATE
OF AUTHORITY #RY34386

JERRY TRAVIS MILLER LICENSED No 89925 STATE OF FLORIDA PROFESSIONAL ENGINEER
7/21/23

MAT'L	–	
DRAWN	JMD	09/05/13
DESIGNER	BFS	SHEET 1 OF 11

DO NOT SCALE DRAWING
TOLERANCES UNLESS OTHERWISE NOTED

DECIMAL	FRACTIONAL
.XX=±.063"	≤12"=±1/16"
.XXX=±.010"	>12" THRU 96"=±1/8"
.XXXX=±.001"	>96" THRU 144"=±1/4"
ANGULAR ±2°	>144"=±3/8"
	(NC)=NO INSPECTION REQ'D

LOREN COOK CO.
MANUFACTURERS OF AIR MOVING EQUIPMENT
SPRINGFIELD, MISSOURI

CP FAN WITH INLET BOX
AND CURB CAP
HURRICANE RATED

SIZE	DRAWING NO.	REV.
B	SD080717-10	C

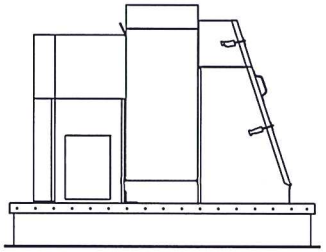

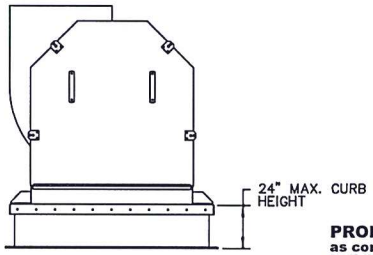

PRODUCT REVISED
as complying with the Florida Building Code
NOA-No. 23-0821.04
Expiration Date 10/02/2024
By
Miami-Dade Product Control

ATTACHMENT OF CURB TO ROOF STRUCTURE

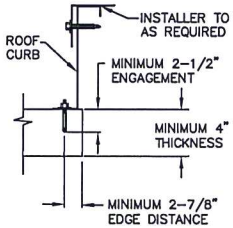

CONCRETE ROOF DECK
MINIMUM 2500PSI CONCRETE

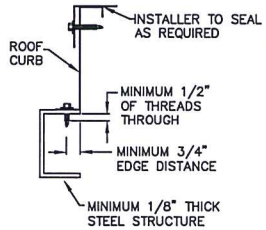

STEEL ROOF STRUCTURE
A36 STEEL STRUCTURE
MINIMUM Fy=36KSI

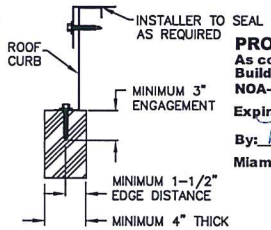

WOOD ROOF STRUCTURE
MIN. 4" NOMINAL THICK WOOD
MIN SG = .42

PRODUCT REVISED
As complying with the Florida Building Code
NOA-No. 24-0912.03
Expiration Date: 10/02/2029
By:
Miami-Dade Product Control

UNIT SIZE	MINIMUM NUMBER OF FASTENERS PER SIDE TO ATTACH UNIT TO CURB		MINIMUM NUMBER OF FASTENERS PER SIDE TO ATTACH CURB TO CONCRETE AND STEEL ROOF STRUCTURE		MINIMUM NUMBER OF FASTENERS PER SIDE TO ATTACH CURB TO WOOD ROOF STRUCTURE	
	LONG SIDE	SHORT SIDE	LONG SIDE	SHORT SIDE	LONG SIDE	SHORT SIDE
60	11	7	8	5	12	7
70	11	7	8	5	12	7
80	11	7	8	5	12	7
100	11	7	8	5	12	7
120	11	7	9	5	12	7
135	12	7	9	5	12	7
150	13	8	9	6	14	8
165	14	9	10	6	14	8
180	15	9	10	6	15	9
195	16	10	12	7	17	10
210	16	11	12	8	18	12
225	17	11	12	10	20	12
245	18	12	14	10	22	14

NOTES:

1) CP MODEL FAN AS REFERRED TO HEREIN REFERS TO ALL LOREN COOK MODEL CP VENT SETS INCLUDING BUT NOT LIMITED TO MODELS CPV, CPA, AND CPS UNITS WHICH ARE CONSTRUCTED WITH THE SAME PAINTED STEEL OUTER HOUSING COMPONENTS AND ARE EQUIPPED WITH A CURB CAP AND INLET BOX.

2) THIS APPROVAL IS FOR THE STRUCTURAL CAPACITY OF THE EXTERIOR HOUSING ONLY, IT DOES NOT INCLUDE ANY INTERIOR MECHANISM OR ELECTRICAL PART.

3) THIS PRODUCT HAS NOT BEEN TESTED FOR WATER PENETRATION ACCORDING TO FLORIDA BUILDING CODE, TAS 100(A), WIND DRIVEN RAIN TEST. IT CANNOT BE INSTALLED WITHIN THE RIDGE AREA (FBC 1523.6.5.2.13)

4) UNIT IS TO INCLUDE A CURB CAP AND INLET BOX TO FACILITATE ROOF MOUNTING ON A ROOF CURB THAT IS ADEQUATELY ATTACHED TO THE ROOF STRUCTURE TO SUSTAIN ALL FORCES WHICH MAY BE PRODUCED BY THE PRESCRIBED ENVIROMENTAL FORCES EXERTED ON THE FAN AND CURB.

CONCRETE DECK: CURB IS TO BE ATTACHED WITH WEDGE TYPE CONCRETE ANCHOR – MINIMUM 3/8" DIAMETER CARBON STEEL – HILTI KWIK BOLT 3 OR EQUAL. MINIMUM 2-1/2" OF ENGAGEMENT IN 2000 PSI MINIMUM CONCRETE. MINIMUM DECK THICKNESS IS 4". ANCHORS ARE TO BE INSTALLED 4" FROM EACH CORNER AND EQUALLY SPACED, SEE TABLE FOR QUANTITY OF ANCHORS PER SIDE.

STEEL ROOF STRUCTURE: CURB IS TO BE ATTACHED WITH SELF-DRILLING STEEL SCREWS OF MINIMUM NOMINAL SIZE OF 1/4" DIAMETER AND SCREWS SHALL PASS THROUGH STEEL AT LEAST 1/2". THE SCREWS SHALL BE INSTALLED 4" FROM EACH CORNER AND EQUALLY SPACED BETWEEN. SEE TABLE FOR MINIMUM QUANTITY OF SCREWS REQUIRED PER CURB SIDE.

WOOD ROOF STRUCTURE: CURB IS TO BE ATTACHED WITH STEEL LAG BOLTS NOMINAL SIZE OF 3/8" DIAMETER OR LARGER. WOOD IS TO BE 4" NOMINAL SIZE OR GREATER. THE BOLT SHALL HAVE A MINIMUM OF 3" OF THREAD ENGAGEMENT. BOLTS SHALL BE INSTALLED 4" FROM EACH CORNER AND EQUALLY SPACED BETWEEN. SEE TABLE FOR MINIMUM QUANTITY OF LAG BOLTS REQUIRED PER CURB SIDE.

5) THE CURB SHALL BE CONSTRUCTED OF G-90 GALVANIZED STEEL OR STAINLESS STEEL. THE CURB MATERIAL THICKNESS SHALL BE 18 GA OR GREATER AND HEIGHT SHALL NOT EXCEED 24".

6) THE CP FAN SHALL BE ATTACHED TO THE CURB WITH ONE OF THE FOLLOWING METHODS INSTALLED ON ALL FOUR SIDES OF THE CURB CAP. THE FASTENERS SHALL BE AT LEAST 3" FROM THE UNIT CORNER AND THE QUANTITY OF FASTENERS SHALL EQUAL OR EXCEED THE QUANTITY SHOWN IN THE FASTENER TABLE.

A) #12 X 2" HEX WASHER HEAD SCREW SELF-DRILLING SCREW
B) ALTERNATE FASTENER – .25" HEX HEAD BOLT WITH COMPANION NUT INSTALLED ON THE INTERIOR OF THE CURB.

7) ALL FASTENERS ARE TO BE HIGH QUALITY CORROSION RESISTANT STEEL OR STAINLESS STEEL.

8) ANY GAP BETWEEN THE CURB AND CURB CAP SHALL BE FILLED BY THE INSTALLING CONTRACTOR WITH A SUITABLE CORROSION RESISTANT MATERIAL THAT ALLOWS THE FASTENERS TO BE INSTALLED WITHOUT CAUSING EXCESSIVE DISTORTION OF THE UNIT FLANGES.

9) THE INSTALLER IS RESPONSIBLE FOR CHECKING THAT ALL FASTENERS ARE PROPERLY INSTALLED AND ALL ACCESS PANELS ARE IN PLACE BEFORE PUTTING THE UNIT INTO SERVICE.

10) ALL FASTENERS AND ACCESS PANELS MUST BE PROPERLY INSTALLED AFTER MAINTENANCE OPERATIONS FOR UNIT TO MAINTAIN CODE COMPLIANCE.

JERRY TRAVIS MILLER- ENGINEER
FLORIDA LICENSE #89925
FLORIDA STATE CERTIFICATE OF AUTHORITY #RY34386

JERRY TRAVIS MILLER
LICENSE
No 89925
STATE OF
FLORIDA
PROFESSIONAL ENGINEER
7/21/23

MAT'L	–	
DRAWN	JMD	09/05/13
DESIGNER	BFS	SHEET 2 OF 11

DO NOT SCALE DRAWING
TOLERANCES UNLESS OTHERWISE NOTED

DECIMAL	FRACTIONAL
.XX=±.063"	≤12"=±1/16"
.XXX=±.010"	>12" THRU 96"=±1/8"
.XXXX=±.001"	>96" THRU 144"=±1/4"
ANGULAR ±2°	>144"=±3/8"
	(NC)=NO INSPECTION REQ'D

LOREN COOK CO.
MANUFACTURERS OF AIR MOVING EQUIPMENT
SPRINGFIELD, MISSOURI

CP FAN WITH INLET BOX AND CURB CAP HURRICANE RATED

SIZE	DRAWING NO.	REV.
B	SD080717-10	C

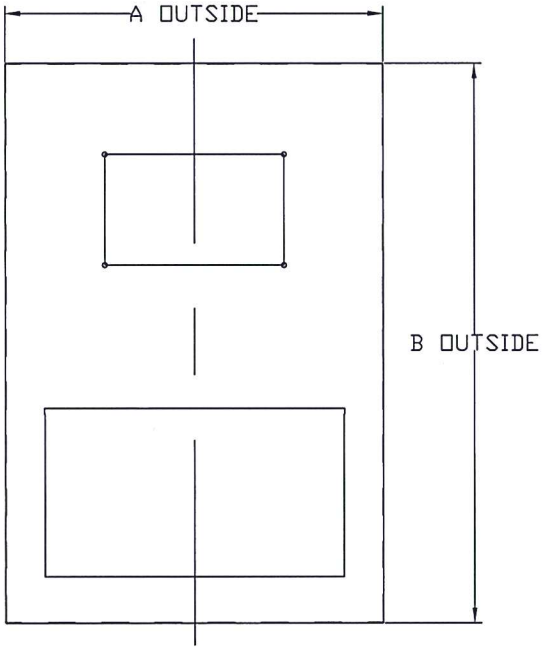

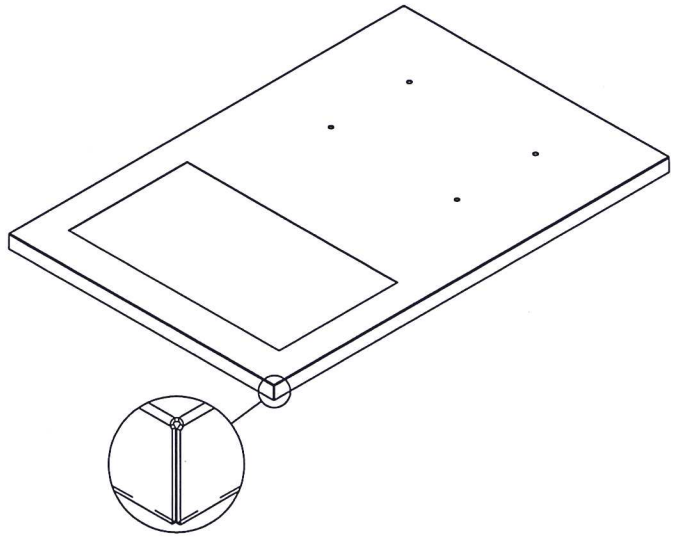

245	51 1/2	75 1/2
225	49 1/2	72 1/2
210	47 1/2	69 1/2
195	43 1/2	66 1/2
180	40 1/2	60 1/2
165	38 1/2	58 1/2
150	36 1/2	55 1/2
135	33 1/2	53 1/2
120	31 1/2	48 1/2
100	31 1/2	47 1/2
80	31 1/2	47 1/2
70	31 1/2	47 1/2
60	31 1/2	47 1/2
UNIT SIZE	A DIM	B DIM

PRODUCT REVISED
As complying with the Florida Building Code
NOA-No. 24-0912.03
Expiration Date: 10/02/2029
By: Manuel Perez
Miami-Dade Product Control

PRODUCT REVISED
as complying with the Florida Building Code
NOA-No. 23-0821.04
Expiration Date 10/02/2024
By
Miami-Dade Product Control

JERRY TRAVIS MILLER- ENGINEER
FLORIDA LICENSE #89925
FLORIDA STATE CERTIFICATE
OF AUTHORITY #RY34386

JERRY TRAVIS MILLER
LICENSE
No 89925
STATE OF
FLORIDA
PROFESSIONAL ENGINEER
7/21/23

MAT'L	A1011 SHEET 14 GA.	
DRAWN	JMD	09/05/13
DESIGNER	BFS	SHEET 3 OF 11

DO NOT SCALE DRAWING

TOLERANCES UNLESS OTHERWISE NOTED

DECIMAL	FRACTIONAL
.XX=±.063"	≤12"=±1/16"
.XXX=±.010"	>12" THRU 96"=±1/8"
.XXXX=±.001"	>96" THRU 144"=±1/4"
ANGULAR ±2°	>144"=±3/8"
	(NC)=NO INSPECTION REQ'D

LOREN COOK CO.
MANUFACTURERS OF AIR MOVING EQUIPMENT
SPRINGFIELD, MISSOURI

CP FANE WITH INLET BOX AND CURB CAP HURRICANE RATED

SIZE	DRAWING NO.	REV.
B	SD080717-10	C

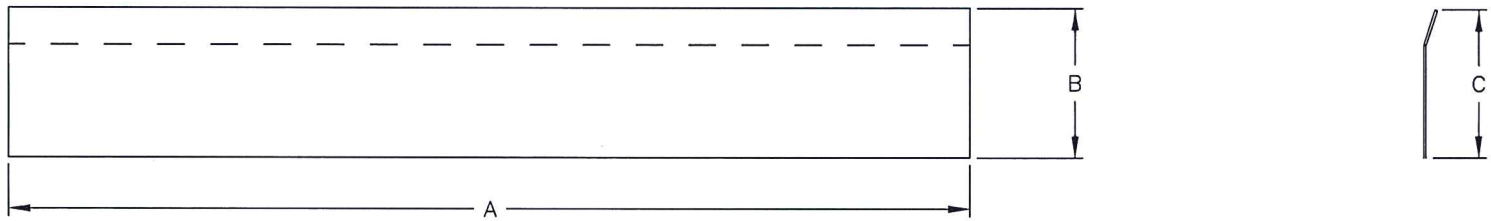

245	42.50	6.70	6.66
225	40.31	5.96	5.92
210	37.75	5.96	5.92
195	34.38	5.20	5.16
180	31.94	4.98	4.93
165	29.63	4.29	4.26
150	27.50	5.96	5.92
135	25.00	3.95	3.90
120	22.63	3.95	3.90
100	22.63	3.95	3.90
80	22.63	3.95	3.90
70	22.63	3.95	3.90
60	22.63	3.95	3.90
UNIT	A	B	C
SIZE	DIM	DIM	DIM

PRODUCT REVISED
As complying with the Florida Building Code
NOA-No. 24-0912.03
Expiration Date: 10/02/2029
By: Manuel Perez
Miami-Dade Product Control

PRODUCT REVISED
as complying with the Florida Building Code
NOA-No. 23-0821.04
Expiration Date 10/02/2024
By
Miami-Dade Product Control

JERRY TRAVIS MILLER- ENGINEER
FLORIDA LICENSE #89925
FLORIDA STATE CERTIFICATE
OF AUTHORITY #RY34386

JERRY TRAVIS MILLER
No 89925
STATE OF
FLORIDA
PROFESSIONAL ENGINEER
7/21/23

MAT'L	A1011 HRS 14 GA.	
DRAWN	JMD	09/05/13
DESIGNER	BFS	SHEET 4 OF 11

DO NOT SCALE DRAWING
TOLERANCES UNLESS OTHERWISE NOTED

DECIMAL	FRACTIONAL
.XX=±.063"	≤12"=±1/16"
.XXX=±.010"	>12" THRU 96"=±1/8"
.XXXX=±.001"	>96" THRU 144"=±1/4"
	>144"=±3/8"
ANGULAR ±2°	(NC)=NO INSPECTION REQ'D

LOREN COOK CO.
MANUFACTURERS OF AIR MOVING EQUIPMENT
SPRINGFIELD, MISSOURI

CP FAN WITH INLET BOX AND CURB CAP HURRICANE RATED

SIZE	DRAWING NO.	REV.
B	SD080717-10	C

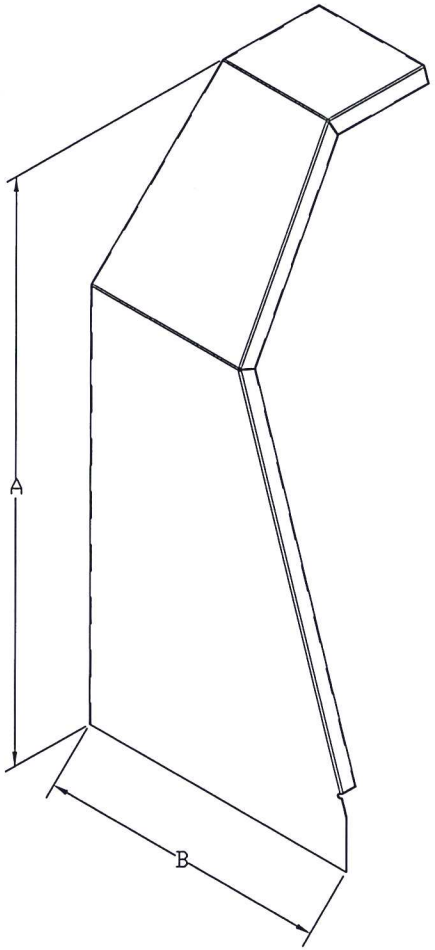

LEFT SIDE SHOWN

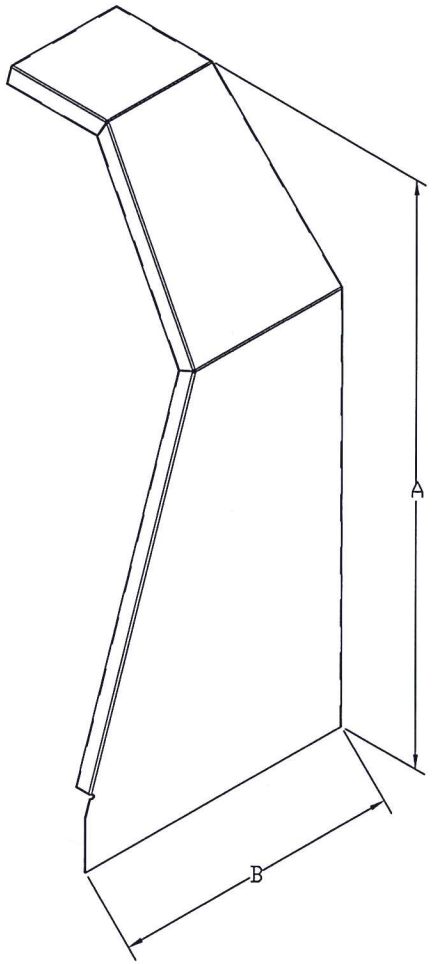

RIGHT SIDE SHOWN

245	48 11/16	24
225	45 7/8	22 5/8
210	43 1/8	21 1/8
195	39 1/2	19 3/8
180	36 9/16	18
165	34	16 5/8
150	32 3/8	15 1/2
135	30	14
120	30	12 3/4
100	30	12 3/4
80	30	12 3/4
70	30	12 3/4
60	30	12 3/4
UNIT	A	B
SIZE	DIM	DIM

PRODUCT REVISED
As complying with the Florida Building Code
NOA-No. 24-0912.03
Expiration Date: 10/02/2029
By: Manuel Perez
Miami-Dade Product Control

PRODUCT REVISED
as complying with the Florida Building Code
NOA-No. 23-0821.04
Expiration Date 10/02/2024
By
Miami-Dade Product Control

JERRY TRAVIS MILLER- ENGINEER
FLORIDA LICENSE #89925
FLORIDA STATE CERTIFICATE
OF AUTHORITY #RY34386

JERRY TRAVIS MILLER
LICENSED
No 89925
STATE OF
FLORIDA
PROFESSIONAL ENGINEER
7/21/23

MAT'L	A1011 HRS SHEET 14 GA.	
DRAWN	JMD	09/05/13
DESIGNER	BFS	SHEET 5 OF 11

DO NOT SCALE DRAWING
TOLERANCES UNLESS OTHERWISE NOTED

DECIMAL	FRACTIONAL
.XX=±.063"	≤12"=±1/16"
.XXX=±.010"	>12" THRU 96"=±1/8"
.XXXX=±.001"	>96" THRU 144"=±1/4"
ANGULAR ±2°	>144"=±3/8"
	(NC)=NO INSPECTION REQ'D

LOREN COOK CO.
MANUFACTURERS OF AIR MOVING EQUIPMENT
SPRINGFIELD, MISSOURI

CP FAN WITH INLET BOX AND CURB CAP HURRICANE RATED

SIZE	DRAWING NO.	REV.
B	SD080717-10	C

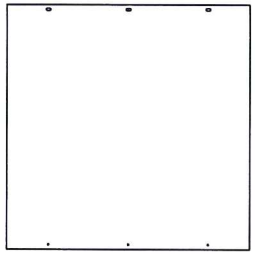

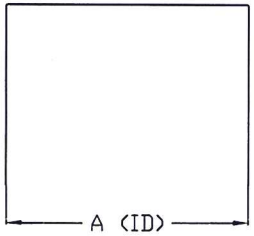

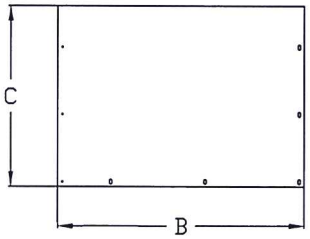

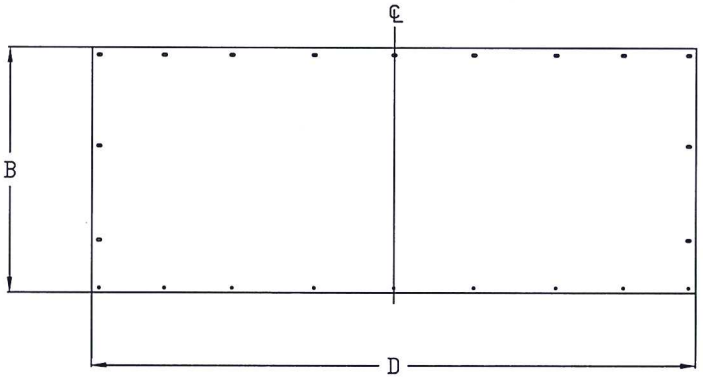

FLAT PATTERN
PART IS SYMMETRICAL ABOUT C/L

245	23 1/8	23 3/16	16 15/16	56 7/8
225	21 1/16	23 3/16	15 15/16	52 13/16
210	20 1/16	23 3/16	15 7/16	50 13/16
195	18 1/16	22 3/16	13 15/16	45 13/16
180	18 1/16	19 3/16	13 7/16	44 13/16
165	16 1/16	19 3/16	12 9/16	41 1/16
150	16 1/16	19 3/16	11 9/16	39 1/16
135	16 1/16	19 3/16	10 9/16	37 1/16
120	16 1/16	17 3/16	9 13/16	35 9/16
100	16 1/16	17 3/16	8 13/16	33 9/16
UNIT	A	B	C	D
SIZE	DIM	DIM	DIM	DIM

PRODUCT REVISED
As complying with the Florida Building Code
NOA-No. 24-0912.03
Expiration Date: 10/02/2029
By: Manuel Perez
Miami-Dade Product Control

PRODUCT REVISED
as complying with the Florida Building Code
NOA-No. 23-0821.04
Expiration Date 10/02/2024
By
Miami-Dade Product Control

JERRY TRAVIS MILLER- ENGINEER
FLORIDA LICENSE #89925
FLORIDA STATE CERTIFICATE
OF AUTHORITY #RY34386

JERRY TRAVIS MILLER
LICENSED
No 89925
STATE OF
FLORIDA
PROFESSIONAL ENGINEER
7/21/23

MAT'L	A1011 STL. 16 GA.	
DRAWN	JMD	09/05/13
DESIGNER	BFS	SHEET 6 OF 11

DO NOT SCALE DRAWING
TOLERANCES UNLESS OTHERWISE NOTED

DECIMAL	FRACTIONAL
.XX=±.063"	≤12"=±1/16"
.XXX=±.010"	>12" THRU 96"=±1/8"
.XXXX=±.001"	>96" THRU 144"=±1/4"
ANGULAR ±2°	>144"=±3/8"

(NC)=NO INSPECTION REQ'D

LOREN COOK CO.
MANUFACTURERS OF AIR MOVING EQUIPMENT
SPRINGFIELD, MISSOURI

CP FAN WITH INLET BOX
AND CURB CAP
HURRICANE RATED

SIZE	DRAWING NO.	REV.
B	SD080717-10	C

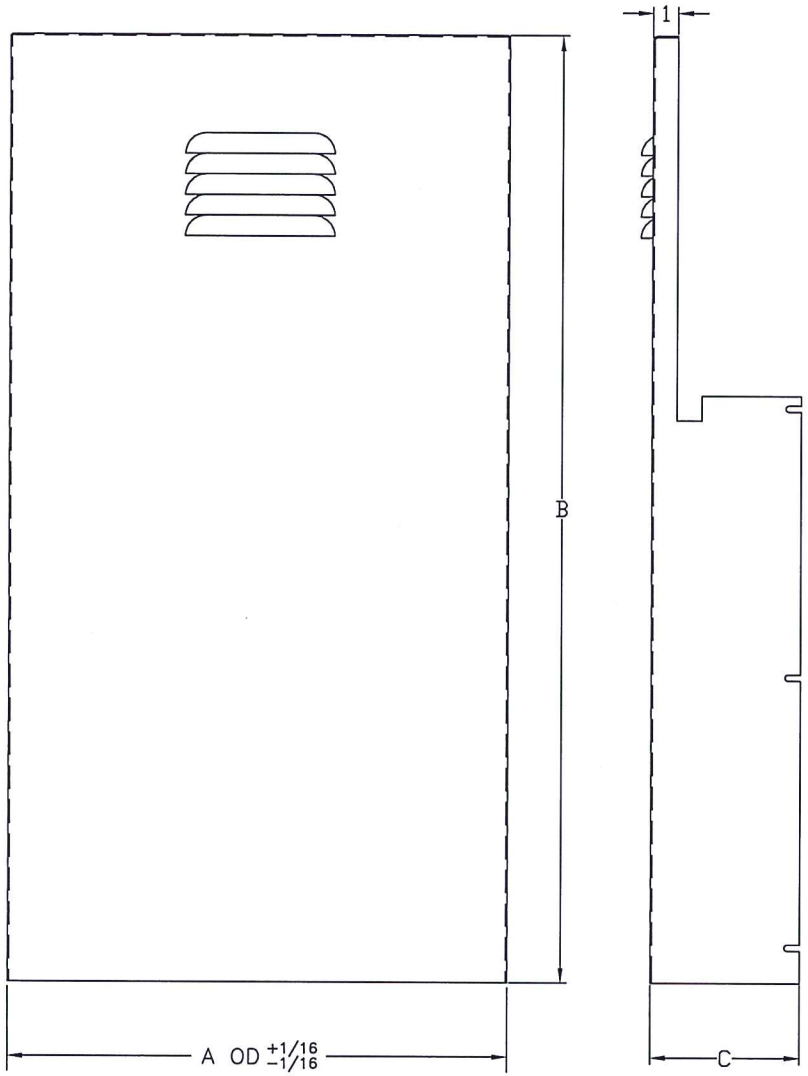

245	250	23	44	6
225	220	21	40 3/8	6
210	–	20	38 1/4	6
195	–	18	35 1/8	5
180	180	18	33	5
165	–	16	30 7/8	5
150	150	16	28 1/2	5
135	–	16	26 3/8	5
120	120	16	25 5/8	5
100	100	16	24 11/16	5
CPS/CPV	CPFB	A	B	C
SIZE		DIM	DIM	DIM

PRODUCT REVISED
As complying with the Florida Building Code
NOA-No. 24-0912.03
Expiration Date: 10/02/2029
By: Manuel Feres
Miami-Dade Product Control

PRODUCT REVISED
as complying with the Florida Building Code
NOA-No. 23-0821.04
Expiration Date 10/02/2024
By
Miami-Dade Product Control

JERRY TRAVIS MILLER- ENGINEER
FLORIDA LICENSE #89925
FLORIDA STATE CERTIFICATE
OF AUTHORITY #RY34386

JERRY TRAVIS MILLER
LICENSE
No 89925
STATE OF
FLORIDA
PROFESSIONAL ENGINEER
7/21/23

MAT'L	A1011 HR STEEL 18 GA.	
DRAWN	JMD	09/05/13
DESIGNER	BFS	SHEET 7 OF 11

DO NOT SCALE DRAWING
TOLERANCES UNLESS OTHERWISE NOTED

DECIMAL	FRACTIONAL
.XX=±.063"	≤12"=±1/16"
.XXX=±.010"	>12" THRU 96"=±1/8"
.XXXX=±.001"	>96" THRU 144"=±1/4"
ANGULAR ±2°	>144"=±3/8"
	(NC)=NO INSPECTION REQ'D

LOREN COOK CO.
MANUFACTURERS OF AIR MOVING EQUIPMENT
SPRINGFIELD, MISSOURI

CP FAN WITH INLET BOX AND CURB CAP HURRICANE RATED

SIZE	DRAWING NO.	REV.
B	SD080717-10	C

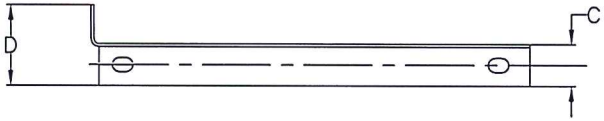

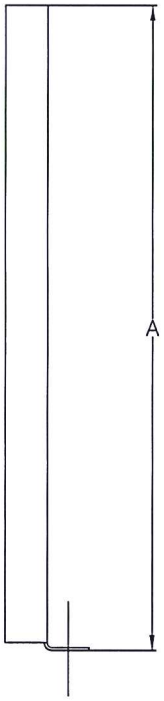

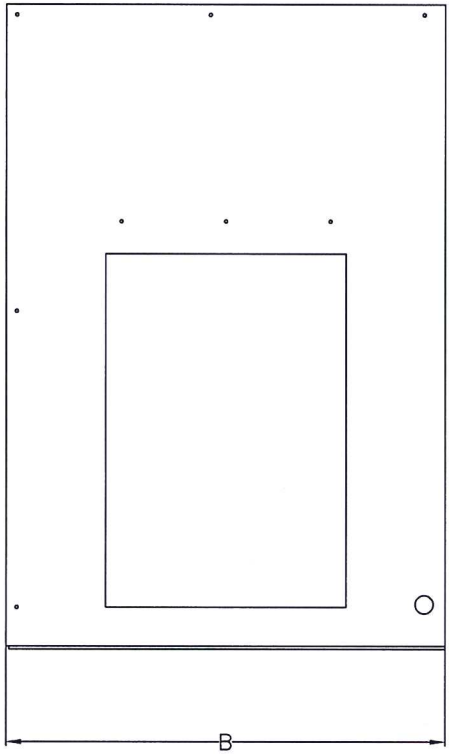

245	28 15/16	18	2	3 7/8	10 GA.
225	26 5/16	18	1 1/2	2 7/8	10 GA.
210	24 11/16	18	1 1/2	2 7/8	10 GA.
195	23	18	1 1/2	2 7/8	10 GA.
UNIT	A	B	C	D	E
SIZE	DIM	DIM	DIM	DIM	DIM

PRODUCT REVISED
As complying with the Florida Building Code
NOA-No. 24-0912.03
Expiration Date: 10/02/2029
By: Manuel Perez
Miami-Dade Product Control

PRODUCT REVISED
as complying with the Florida Building Code
NOA-No. 23-0821.04
Expiration Date 10/02/2024
By
Miami-Dade Product Control

JERRY TRAVIS MILLER- ENGINEER
FLORIDA LICENSE #89925
FLORIDA STATE CERTIFICATE
OF AUTHORITY #RY34366

JERRY TRAVIS MILLER
LICENSED
No 89925
STATE OF
FLORIDA
PROFESSIONAL ENGINEER
7/21/23

NOTES:
1. 2 REQUIRED, BEND ONE OPPOSITE

MAT'L	A1011 SHEET STL, E GA.	
DRAWN	JMD	09/05/13
DESI GNER	BFS	SHEET 8 OF 11

DO NOT S CALE D RAWING
TOLERANCES UNLE SSOT H ERWISE NOTED

DECIMAL	FRACTIONAL
.XX=±.063"	≤12"=±1/16"
.XXX=±.010"	>12" THRU 96"=±1/8"
.XXXX=±.001"	>96" THRU 144"=±1/4"
	>144"=±3/8"
ANGULAR ±2'	(NC)=NO I NSPECTI ONRE Q'D

LOREN COOK CO.
MANUFACTURERS OF AIR MOVING EQUIPMENT
SPRINGFIELD, MISSOURI

CP FAN WITH INLET BOX
AND CURB CAP
HURRICANE RATED

SI ZE	DRA WI NGNO.	REV.
B	SD080717-10	C

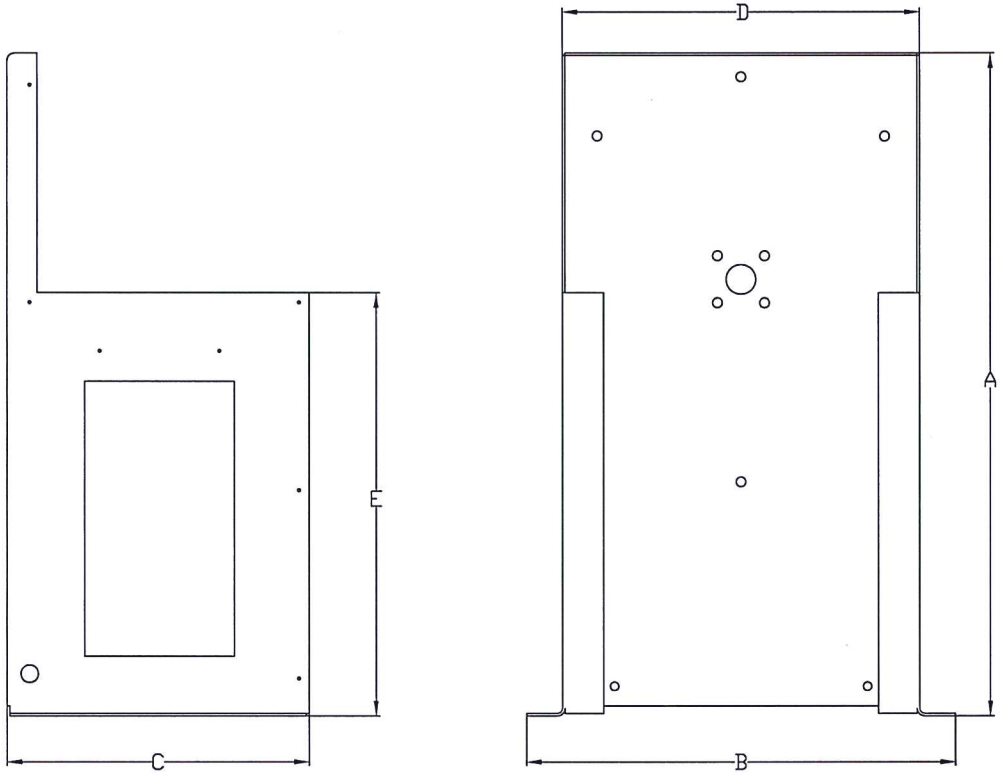

180	33 1/2	20 3/4	15 1/8	18	21 3/8	10 GA.
165	31 3/8	18 3/4	15 1/8	16	20 1/8	10 GA.
150	29	18 3/4	15 1/8	16	18 3/4	12 GA.
135	26 15/16	18 3/4	15 1/8	16	17 11/16	12 GA.
120	26 3/16	18 3/4	13 1/8	16	17 11/16	12 GA.
100	25 3/16	18 3/4	13 1/8	16	17 11/16	12 GA.
SIZE	A	B	C	D	E	F
UNIT	DIM	DIM	DIM	DIM	DIM	DIM

PRODUCT REVISED
As complying with the Florida Building Code
NOA-No. 24-0912.03
Expiration Date: 10/02/2029
By: Manuel Perez
Miami-Dade Product Control

PRODUCT REVISED
as complying with the Florida Building Code
NOA-No. 23-0821.04
Expiration Date 10/02/2024
By
Miami-Dade Product Control

JERRY TRAVIS MILLER- ENGINEER
FLORIDA LICENSE #89925
FLORIDA STATE CERTIFICATE
OF AUTHORITY #RY34386

JERRY TRAVIS MILLER
LICENSED
No 89925
STATE OF
FLORIDA
PROFESSIONAL ENGINEER
7/21/23

MAT'L	A1011 HRS F GA.	
DRAWN	JMD	09/05/13
DESIGNER	BFS	SHEET 9 OF 11

DO NOT SCALE DRAWING
TOLERANCES UNLESS OTHERWISE NOTED

DECIMAL	FRACTIONAL
.XX=±.063"	≤12"=±1/16"
.XXX=±.010"	>12" THRU 96"=±1/8"
.XXXX=±.001"	>96" THRU 144"=±1/4"
ANGULAR ±2°	>144"=±3/8"
	(NC)=NO INSPECTON REQ'D

LOREN COOK CO.
MANUFACTURERS OF AIR MOVING EQUIPMENT
SPRINGFIELD, MISSOURI

CP FAN WITH INLET BOX AND CURB CAP HURRICANE RATED

SIZE	DRAWING NO.	REV.
B	SD080717-10	C

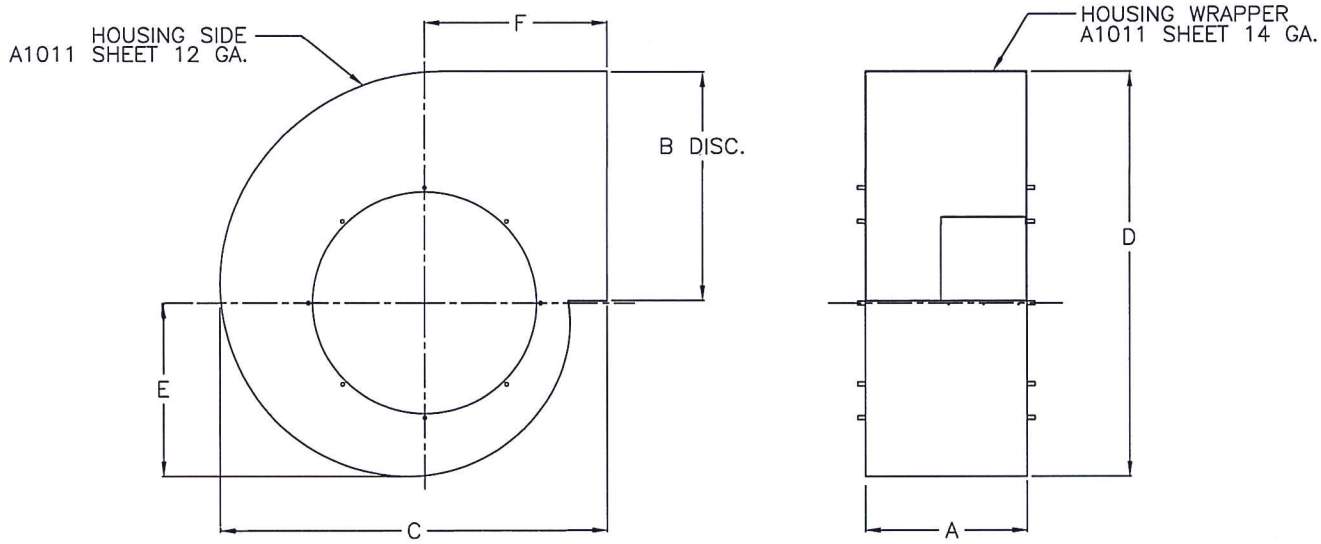

245	18 3/4	26 13/16	45 1/16	46 1/2	20 1/16	21 3/4
225	17 3/16	24 5/8	42	42 13/16	18 7/16	20 5/8
210	16 1/16	23	39 15/16	40 1/16	17 3/16	20
195	14 15/16	21 5/16	36 5/16	37 1/8	15 15/16	17 13/16
180	13 3/4	19 11/16	34 3/4	34 3/16	14 3/4	17 5/8
165	12 5/8	18 1/16	32 1/16	31 5/16	13 1/2	16 3/8
150	11 7/16	16 7/16	29 9/16	29 1/2	12 15/16	15 5/16
135	10 5/16	14 3/4	26 11/16	25 3/4	11 1/16	13 7/8
120	9 3/16	13 1/8	24 13/16	22 13/16	9 13/16	13 3/8
100	7 9/16	10 15/16	22 1/4	19	8 1/16	12 3/4
UNIT	A	B	C	D	E	F
SIZE	DIM	DIM	DIM	DIM	DIM	DIM

PRODUCT REVISED
As complying with the Florida Building Code
NOA-No. 24-0912.03
Expiration Date: 10/02/2029
By: Manuel Perez
Miami-Dade Product Control

PRODUCT REVISED
as complying with the Florida Building Code
NOA-No. 23-0821.04
Expiration Date 10/02/2024
By
Miami-Dade Product Control

JERRY TRAVIS MILLER- ENGINEER
FLORIDA LICENSE #89925
FLORIDA STATE CERTIFICATE
OF AUTHORITY #RY34386

JERRY TRAVIS MILLER
LICENSE
No 89925
STATE OF
FLORIDA
PROFESSIONAL ENGINEER
7/21/23

MAT'L	SEE NOTE	
DRAWN	JMD	09/05/13
DESIGNER	BFS	SHEET 10 OF 11

DO NOT SCALE DRAWING
TOLERANCES UNLESS OTHERWISE NOTED

DECIMAL	FRACTIONAL
.XX=±.063"	≤12"=±1/16"
.XXX=±.010"	>12" THRU 96"=±1/8"
.XXXX=±.001"	>96" THRU 144"=±1/4"
ANGULAR ±2'	>144"=±3/8"
	(NC)=NO INSPECTION REQ'D

LOREN COOK CO.
MANUFACTURERS OF AIR MOVING EQUIPMENT
SPRINGFIELD, MISSOURI

CP FAN WITH INLET BOX
AND CURB CAP
HURRICANE RATED

SIZE	DRAWING NO.	REV.
B	SD080717-10	C

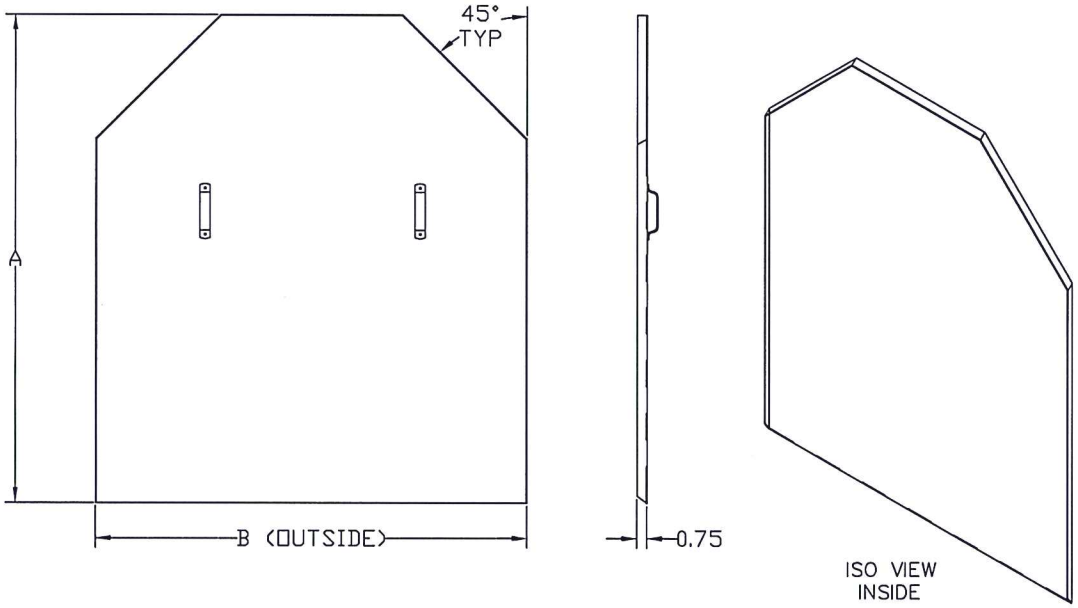

(PART SYMMETRICAL AROUND CENTERLINE)

245	48.66	42 5/8
225	45.94	40 9/16
210	43.19	38
195	39.52	34 1/2
180	36.57	32 1/8
165	34.01	29 3/4
150	32.44	27 3/4
135	30.01	25 1/8
120	30.01	22 3/4
100	30.01	22 3/4
80	30.01	22 3/4
70	30.01	22 3/4
60	30.01	22 3/4
UNIT	A	B
SIZE	DIM	DIM

PRODUCT REVISED
As complying with the Florida Building Code
NOA-No. 24-0912.03
Expiration Date: 10/02/2029
By: Manuel Perez
Miami-Dade Product Control

PRODUCT REVISED
as complying with the Florida Building Code
NOA-No. 23-0821.04
Expiration Date 10/02/2024
By
Miami-Dade Product Control

JERRY TRAVIS MILLER- ENGINEER
FLORIDA LICENSE #89925
FLORIDA STATE CERTIFICATE
OF AUTHORITY #RY34386
JERRY TRAVIS MILLER
No 89925
STATE OF
FLORIDA
PROFESSIONAL ENGINEER
7/21/23

MAT'L	A1011 HRS SHEET 14 GA.	
DRAWN	JMD	09/05/13
DESIGNER	BFS	SHEET 11 OF 11

DO NOT SCALE DRAWING
TOLERANCES UNLESS OTHERWISE NOTED

DECIMAL	FRACTIONAL
.XX=±.063"	≤12"=±1/16"
.XXX=±.010"	>12" THRU 96"=±1/8"
.XXXX=±.001"	>96" THRU 144"=±1/4"
	>144"=±3/8"
ANGULAR ±2°	(NC)=NO INSPECTION REQ'D

LOREN COOK CO.
MANUFACTURERS OF AIR MOVING EQUIPMENT
SPRINGFIELD, MISSOURI

CP FAN WITH INLET BOX
AND CURB CAP
HURRICANE RATED

SIZE	DRAWING NO.	REV.
B	SD080717-10	C

MIAMI-DADE COUNTY
PRODUCT CONTROL SECTION
11805 SW 26 Street, Room 208
Miami, Florida 33175-2474
T (786) 315-2590 F (786) 315-2599
www.miamidade.gov/building

DEPARTMENT OF REGULATORY AND ECONOMIC RESOURCES (RER)
BOARD AND CODE ADMINISTRATION DIVISION

NOTICE OF ACCEPTANCE (NOA)

Loren Cook Company
2015 E. Dale Street
Springfield, MO 65803

SCOPE: This NOA is being issued under the applicable rules and regulations governing the use of construction materials. The documentation submitted has been reviewed and accepted by Miami-Dade County RER-Product Control Section to be used in Miami Dade County and other areas where allowed by the Authority Having Jurisdiction (AHJ).

This NOA shall not be valid after the expiration date stated below. The Miami-Dade County Product Control Section (In Miami Dade County) and/or the AHJ (in areas other than Miami Dade County) reserve the right to have this product or material tested for quality assurance purposes. If this product or material fails to perform in the accepted manner, the manufacturer will incur the expense of such testing and the AHJ may immediately revoke, modify, or suspend the use of such product or material within their jurisdiction. RER reserves the right to revoke this acceptance if it is determined by Miami-Dade County Product Control Section that this product or material fails to meet the requirements of the applicable building code.

This product is approved as described herein and has been designed to comply with the Florida Building Code, including the High Velocity Hurricane Zone.

DESCRIPTION: Models "CPV, CPS and CPF" Steel Rooftop Fans

APPROVAL DOCUMENT: Drawing No. **SD130522-18**, titled "Assembly CPV/CPS/CPF Hurricane Rated", sheets 1 through 14 of 14, dated 05/22/13, with revision **D** dated 11/06/23, prepared by manufacturer, signed and sealed by Jerry Travis Miller, P.E. bearing the Miami-Dade County Product Control Revision stamp with the Notice of Acceptance number and expiration date by the Miami-Dade County Product Control Section.

MISSILE IMPACT RATING: Large and Small Missile Impact Resistant

LABELING: Each unit shall bear a permanent label with the manufacturer's name or logo, manufacturing address, model number, the positive and negative design pressure rating, indicate impact rated if applicable, installation instruction drawing reference number, approval number (NOA), the applicable test standards, and the statement reading 'Miami-Dade County Product Control Approved' is to be located on the door's side track, bottom angle, or inner surface of a panel.

RENEWAL of this NOA shall be considered after a renewal application has been filed and there has been no change in the applicable building code negatively affecting the performance of this product.

TERMINATION of this NOA will occur after the expiration date or if there has been a revision or change in the materials, use, and/or manufacture of the product or process. Misuse of this NOA as an endorsement of any product, for sales, advertising or any other purposes shall automatically terminate this NOA. Failure to comply with any section of this NOA shall be cause for termination and removal of NOA.

ADVERTISEMENT: The NOA number preceded by the words Miami-Dade County, Florida, and followed by the expiration date may be displayed in advertising literature. If any portion of the NOA is displayed, then it shall be done in its entirety.

INSPECTION: A copy of this entire NOA shall be provided to the user by the manufacturer or its distributors and shall be available for inspection at the job site at the request of the Building Official.

This NOA **revises and renews NOA No. 23-0821.06** and consists of this page 1 and evidence pages E-1, E-2 and E-3, as well as approval document mentioned above.

The submitted documentation was reviewed by **Manuel Perez, P.E.**

MIAMI-DADE COUNTY APPROVED

10/04/24

NOA No. 24-0912.04
Expiration Date: December 19, 2029
Approval Date: October 10, 2024

Loren Cook Company.

NOTICE OF ACCEPTANCE: EVIDENCE SUBMITTED

1. EVIDENCE SUBMITTED UNDER PREVIOUS NOA's

A. DRAWINGS

1. Manufacturer's die drawings and sections.
(Submitted under NOA No. 13-0604.08)

2. Drawing No. SD130522-18, titled "Assembly CPV/CPS/CPF Hurricane Rated", sheets 1 through 14 of 14, dated 05/22/13, with revision **D** dated 11/06/23, prepared by manufacturer, signed and sealed by Jerry Travis Miller, P.E.
(Submitted under NOA No. 23-0821.06)

B. TESTS

1. Test reports on: 1) Uniform Static Air Pressure Test, Loading per FBC TAS 202-94
2) Large Missile Impact Test per FBC, TAS 201-94
along with marked up drawings and installation diagram of CPV fans, prepared by Architectural Testing, Inc. Test Report No. **B9387.01-801-18**, dated 04/17/13, signed and sealed by Vinu J. Abraham, P.E.
(Submitted under NOA No. 13-0604.08)

C. CALCULATIONS

1. Wind loads and anchor capacity calculations dated 11/27/13, prepared by manufacturer, signed and sealed by Bradley F. Skidmore, P.E.
(Submitted under NOA No. 13-0604.08)

D. QUALITY ASSURANCE

1. Miami-Dade Department of Regulatory and Economic Resources (RER)

E. MATERIAL CERTIFICATIONS

1. None.

Manuel Perez

Manuel Perez, P.E.
Product Control Examiner
NOA No. 24-0912.04
Expiration Date: December 19, 2029
Approval Date: October 10, 2024

1. EVIDENCE SUBMITTED UNDER PREVIOUS NOA's (CONTINUED)

F. STATEMENTS

1. Statement letter of conformance, complying with **FBC 8th Edition (2023)** dated 07/28/23, issued by manufacturer, signed and sealed by Jerry Travis Miller, P.E.
   (Submitted under NOA No. 23-0821.06)
2. Statement letter of no financial interest dated 11/06/23, issued by manufacturer, signed and sealed by Jerry Travis Miller, P.E.
   (Submitted under NOA No. 23-0821.06)
3. Testing contract notification issued by Intertek, dated 11/17/23, signed by Cassandra Matthews, Regional Administrative Manager.
   (Submitted under NOA No. 23-0821.06)

G. OTHERS

1. Notice of Acceptance No. **21-0405.10**, issued to Loren Cook Company for their Models "CPV, CPS and CPF" Steel Rooftop Fans – L.M.I., approved on 06/24/21 and expiring on 12/19/23.

Manuel Perez

Manuel Perez, P.E.
Product Control Examiner
NOA No. 24-0912.04
Expiration Date: December 19, 2029
Approval Date: October 10, 2024

Loren Cook Company.

NOTICE OF ACCEPTANCE: EVIDENCE SUBMITTED

2. NEW EVIDENCE SUBMITTED

A. DRAWINGS

1. None.

B. TESTS

1. Test reports on: 1) Uniform Static Air Pressure Test, Loading per FBC TAS 202-94
2) Large Missile Impact Test per FBC, TAS 201-94
3) Cyclic Wind Pressure Loading per FBC, TAS 203-94
along with marked-up drawings and installation diagram of Series/Model 120 CPV Exhaust Fan, metal roof vent, prepared by Intertek, Test Report No. **Q7253.01-801-18 R0**, dated 03/05/24, signed and sealed by Tyler Westerling, P.E.

C. CALCULATIONS

1. None.

D. QUALITY ASSURANCE

1. Miami-Dade Department of Regulatory and Economic Resources (RER)

E. MATERIAL CERTIFICATIONS

1. None.

F. STATEMENTS

1. None.

G. OTHERS

1. Notice of Acceptance No. **23-0821.06**, issued to Loren Cook Company for their Models "CPV, CPS and CPF" Steel Rooftop Fans", approved on 01/18/24 and expiring on 12/19/24.

Manuel Perez

Manuel Perez, P.E.
Product Control Examiner
NOA No. 24-0912.04
Expiration Date: December 19, 2029
Approval Date: October 10, 2024

PRODUCT REVISED
As complying with the Florida Building Code
NOA-No. 24-0912.04
Expiration Date: 12/19/2029
By: Manuel Perez
Miami-Dade Product Control

PRODUCT REVISED
as complying with the Florida Building Code
NOA-No. 23-0821.06
Expiration Date 12/19/2024
By
Miami-Dade Product Control

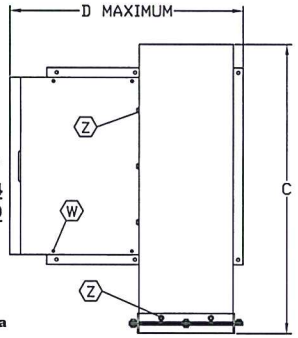

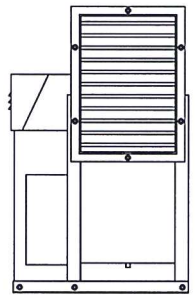

60–150 DIRECT DRIVE ARRANGEMENT

UNIT SIZE	A MAXIMUM	B DIM	C DIM	D MAXIMUM	E DIM	MAXIMUM SHIPPING WT.
490	111 1/2	56 1/4	90 1/4	75	47 5/8	2375
445	101 3/4	51 3/8	82 1/16	71 9/16	43 5/8	1984
402	92 1/2	46 3/4	74 7/16	64 5/16	39 5/8	1556
365	84 1/2	42 3/4	67 5/8	60 7/16	35 5/8	1277
330	76 3/4	38 7/8	61 5/16	53 13/16	33 5/8	1056
300	71 1/4	35 5/8	55 7/8	51 1/2	30 5/8	897
270	63 3/4	32 3/8	50 9/16	49 1/16	28 3/4	736
245/250	58 1/4	29 5/8	46 9/16	44 3/16	26 3/4	620
220/225	53	27	43 1/2	42 1/8	23 3/4	547
210	49 3/4	25 3/8	41 7/16	41	22 3/4	499
195	46 3/8	23 11/16	37 13/16	38 7/8	20 3/4	450
180	43 1/8	22 1/16	36 1/4	34 11/16	20 3/4	404
165	39 7/8	20 7/16	33 9/16	33 9/16	18 3/4	341
150	37 1/8	19 1/16	31 1/16	32 3/8	18 3/4	297
135	34 3/16	18	28 3/16	31 1/4	18 3/4	260
120	32 9/16	18	26 5/16	28 1/8	18 3/4	225
100	30 3/8	18	23 3/4	26 1/2	18 3/4	165
80	30 3/8	18	23 3/4	26 1/2	18 3/4	165
70	30 3/8	18	23 3/4	26 1/2	18 3/4	165
60	30 3/8	18	23 3/4	26 1/2	18 3/4	165

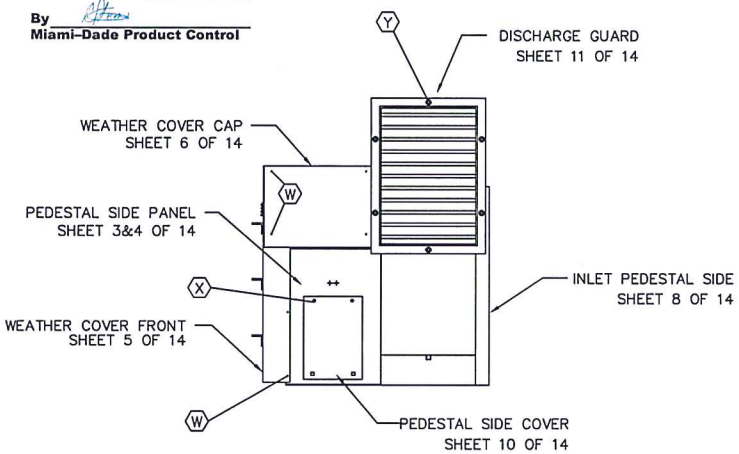

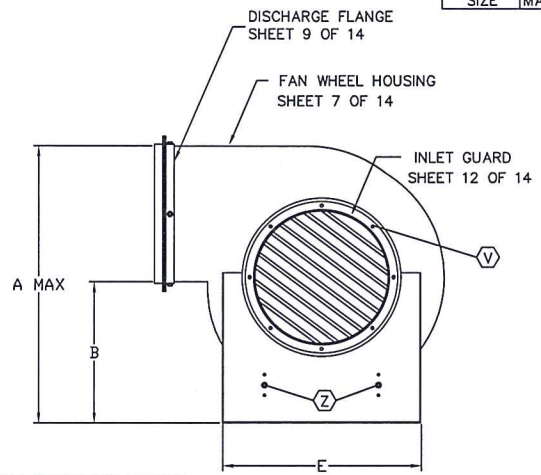

SYMBOL	DESCRIPTION
	FASTENER SCHEDULE
Z	3/8–16 HEX HEAD BOLT SAE GRADE 2
Y	SIZE 490: 1/2–13 BOLT SAE GR2 SIZE 60–445: 3/8–16 BOLT SAE GR2
X	1/4 X 3/4 SELF–DRILL SCREW ASTM C1513
W	#12 X 3/4 SELF–DRILL SCREW ASTM C1513
V	SIZE 330–490: 1/2–13 BOLT SAE GR2 SIZE 60–300: 3/8–16 BOLT SAE GR2

NOTE:
DESIGN PRESSURE: +/– 100 PSF
IMPACT RATING: LARGE MISSILE IMPACT RESISTANT
DESIGN TESTING AND INSTALLATION CONFORMS TO FLORIDA BUILDING CODE
ALL CARBON STEEL IS COATED WITH BAKED POLYESTER POWDER COATING OR EQUAL
ALL CARBON STEEL COMPONENTS HAVE MINIMUM YIELD STRENGTH = 30KSI
SHIPPING WEIGHTS IN POUNDS, LESS MOTOR AND ACCESSORIES
ALL DIMENSIONS IN INCHES

JERRY TRAVIS MILLER- ENGINEER
FLORIDA LICENSE #89925
FLORIDA STATE CERTIFICATE
OF AUTHORITY #RY34386

JERRY TRAVIS MILLER
No 89925
STATE OF FLORIDA
PROFESSIONAL ENGINEER
11/6/23

MAT'L	–	
DRAWN	BFS	5/22/13
DESIGNER	BFS	SHEET 1 OF 14

DO NOT SCALE DRAWING
TOLERANCES UNLESS OTHERWISE NOTED

DECIMAL	FRACTIONAL
.XX=±.063" .XXX=±.010" .XXXX=±.001"	≤12"=±1/16" >12" THRU 96"=±1/8" >96" THRU 144"=±1/4" >144"=±3/8"
ANGULAR ±2°	(NC)=NO INSPECTION REQ'D

LOREN COOK CO.
MANUFACTURERS OF AIR MOVING EQUIPMENT
SPRINGFIELD, MISSOURI

ASSEMBLY
CPV/CPS/CPF
HURRICANE RATED

SIZE	DRAWING NO.	REV.
B	SD130522–18	D

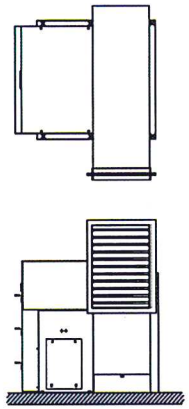

DIRECT MOUNT – STEEL STRUCTURE (36KSI)
UNIT MUST BE ATTACHED TO ROOF STRUCTURE USING SIX GRADE 5 FASTENERS OF SIZE LISTED BELOW.

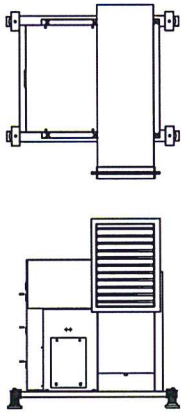

ISOLATION RAIL MOUNT
UNIT MUST BE ATTACHED TO ISOLATION RAILS USING SIX GRADE 5 BOLTS LISTED BELOW. THE ISOLATORS WILL BE ANCHORED TO THE ROOF USING FASTENER SIZE LISTED IN TABLE.

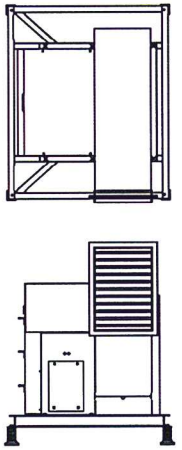

ISOLATION BASE MOUNT
UNIT MUST BE ATTACHED TO ISOLATION RAILS USING SIX GRADE 5 BOLTS LISTED BELOW. THE ISOLATORS WILL BE ANCHORED TO THE ROOF USING FASTENER SIZE LISTED IN THE TABLE

UNIT SIZE	DIRECT MOUNT	DIRECT DRIVE	BELT DRIVE					
		ISOLATOR MOUNT FOUR ISOLATORS PER UNIT TWO FASTENERS PER ISOLATOR	ISOLATION RAIL AND ISOLATION BASE MOUNT (REQUIRES FOUR ISOLATORS PER UNIT WITH TWO ATTACHMENT ANCHORS FOR EACH ISOLATOR)					
	MINIMUM HOLD-DOWN BOLT SIZE		ISOLATOR TYPE	VERTICAL RESTRAINT CAPACITY	CONCRETE ATTACHMENT		STEEL STRUCTURE	WOOD ATTACHMENT
					ANCHOR SIZE	MINIMUM ENGAGEMENT	GRADE 5 BOLT SIZE	LAG BOLT SIZE
60 – 135	3/8	3/8	LIGHT	1000#	3/8	3"	3/8	3/8
150 – 225	1/2							
245 – 300	5/8		MEDIUM	2300#	5/8	4"	5/8	
330 – 402	3/4							
445 – 490	7/8		HEAVY	4000#	5/8	4"	5/8	

ANCHORAGE OF FAN BASE AND ISOLATORS TO ROOF STRUCTURE

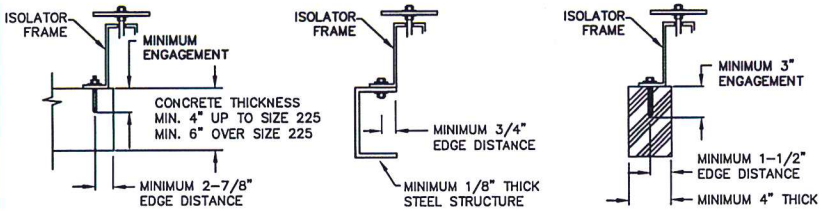

CONCRETE ROOF DECK
MINIMUM 3000PSI CONCRETE

STEEL ROOF STRUCTURE
A36 STEEL STRUCTURE
MINIMUM Fy=36KSI

WOOD ROOF STRUCTURE
MIN. 4" NOMINAL THICK WOOD
MIN SG = .42

NOTES:

1) LOREN COOK MODEL CP FANS AS REFERRED TO HEREIN REFERS TO ALL LOREN COOK MODEL VENT SETS HAVING OUTER HOUSING CONSTRUCTED OF CARBON STEEL OR STAINLESS STEEL AND INDICATED AS MODEL CPV, CPS , CPS-A, CPF (BELT AND DIRECT).
2) THIS APPROVAL IS FOR THE STRUCTURAL PERFORMANCE AND IMPACT RESISTANCE ONLY. INTERIOR MECHANISM AND/OR ELECTRICAL CIRCUITRY ARE OUTSIDE THE SCOPE OF THIS APPROVAL.
3) CLOCKWISE ROTATION IS DEPICTED IN THE ILLISTRATIONS IN THIS DOCUMENT. CLOCKWISE AND COUNTER-CLOCKWISE ROTATIONS ARE BOTH INCLUDED IN THE SCOPE OF THIS APPROVAL.
4) THE TOP HORIZONTAL (THD) FAN DISCHARGE IS DEPICTED IN THE ILLISTRATIONS OF THIS DOCUMENT. ALL NORMAL DISCHARGE LOCATIONS ARE INCLUDED IN THIS APPROVAL. (THD,BHD,BAU,UPD,TAU,TAD,DBD)
5) THIS PRODUCT HAS NOT BEEN TESTED FOR WATER PENETRATION. THIS UNIT IS NOT CONSIDERED A RIDGE VENT.
6) THIS PRODUCT IS INTENDED TO ALLOW AIRFLOW TO PASS THROUGH ITS INLET AND OUTLET. WHEN THE INLET AND OUTLET OF THE FAN REQUIRE DUCT WORK, GUARDS ARE NOT REQUIRED ON THAT OPENING. ACCESSORIES (I.E. RAIN HOODS, BIRD SCREENS AND FILTER BOXES) ARE NOT PART OF THIS APPROVAL.
7) ALL FASTENERS ARE TO BE HIGH QUALITY CORROSION RESISTANT STEEL OR STAINLESS STEEL.
8) WHEN INSTALLING ON ISOLATORS, THE ISOLATORS MUST HAVE RESTRAINT CAPACITY TO RESIST THE UPLIFT AND OVERTURNING FORCES PRODUCED AT THE DESIGN WINDLOAD. FREE-STANDING SPRINGS ARE NOT ALLOWED.
9) ISOLATOR ANCHORS MUST BE PROPERLY SIZED TO RESIST THE FORCES PRODUCED AT THE DESIGN WINDLOAD.
10) THE INSTALLER IS RESPONSIBLE FOR CHECKING THAT ALL FASTENERS ARE PROPERLY INSTALLED AND ALL ACCESS PANELS ARE IN PLACE BEFORE PUTTING THE UNIT INTO SERVICE.
11) ALL FASTENERS AND ACCESS PANELS MUST BE PROPERLY REPLACED AFTER MAINTENANCE OPERATIONS HAVE BEEN PERFORMED TO MAINTAIN CODE COMPLIANCE.

PRODUCT REVISED
As complying with the Florida Building Code
NOA-No. 24-0912.04
Expiration Date: 12/19/2029
By: Manuel Perez
Miami-Dade Product Control

PRODUCT REVISED
as complying with the Florida Building Code
NOA-No. 23-0821.06
Expiration Date 12/19/2024
By
Miami-Dade Product Control

JERRY TRAVIS MILLER- ENGINEER
FLORIDA LICENSE #89925
FLORIDA STATE CERTIFICATE OF AUTHORITY #RY34386

JERRY TRAVIS MILLER
No 89925
STATE OF FLORIDA
PROFESSIONAL ENGINEER
11/6/23

MAT'L	–	
DRAWN	BFS	5/22/13
DESIGNER	BFS	SHEET 2 OF 14

DO NOT SCALE DRAWING
TOLERANCES UNLESS OTHERWISE NOTED

DECIMAL	FRACTIONAL
.XX=±.063"	≤12"=±1/16"
.XXX=±.010"	>12" THRU 96"=±1/8"
.XXXX=±.001"	>96" THRU 144"=±1/4"
	>144"=±3/8"
ANGULAR ±2°	(NC)=NO INSPECTION REQ'D

LOREN COOK CO.
MANUFACTURERS OF AIR MOVING EQUIPMENT
SPRINGFIELD, MISSOURI

ASSEMBLY
CPV/CPS/CPF
HURRICANE RATED

SIZE	DRAWING NO.	REV.
B	SD130522-18	D

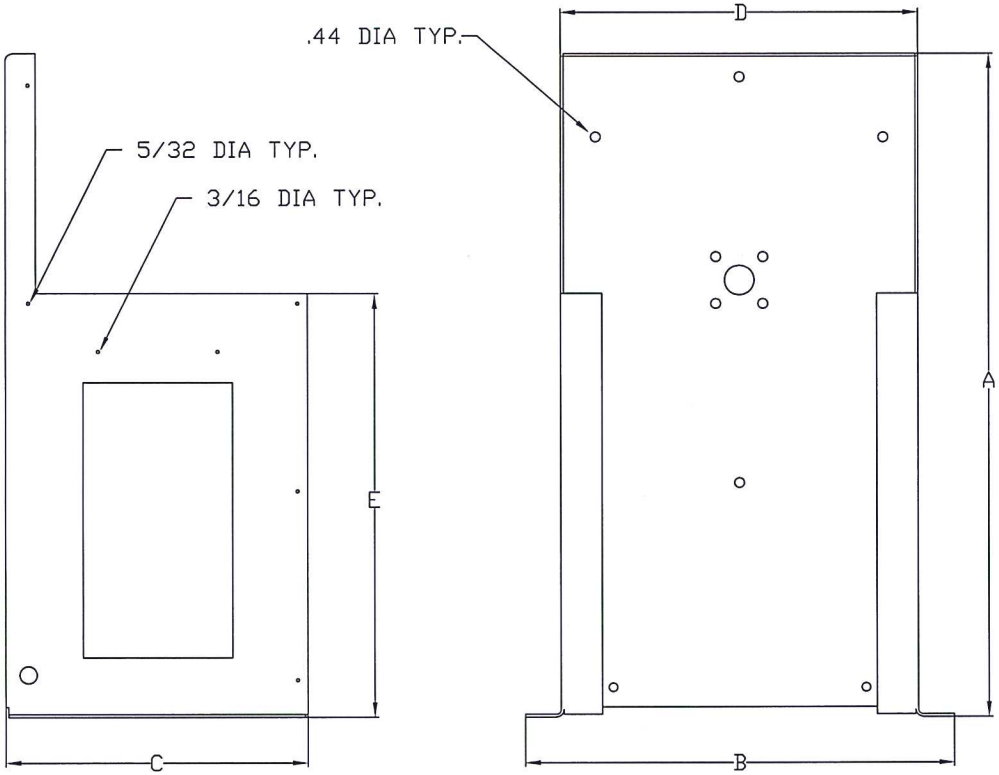

180	33 1/2	20 3/4	15 1/8	18	21 3/8	10 GA.
165	31 3/8	18 3/4	15 1/8	16	20 1/8	10 GA.
150	29	18 3/4	15 1/8	16	18 3/4	12 GA.
135	26 15/16	18 3/4	15 1/8	16	17 11/16	12 GA.
120	26 3/16	18 3/4	13 1/8	16	17 11/16	12 GA.
60-100	25 3/16	18 3/4	13 1/8	16	17 11/16	12 GA.
SIZE	A	B	C	D	E	F
UNIT	DIM	DIM	DIM	DIM	DIM	DIM

PRODUCT REVISED
As complying with the Florida Building Code
NOA-No. 24-0912.04
Expiration Date: 12/19/2029
By: Manuel Perez
Miami-Dade Product Control

PRODUCT REVISED
as complying with the Florida Building Code
NOA-No. 23-0821.06
Expiration Date 12/19/2024
By
Miami-Dade Product Control

JERRY TRAVIS MILLER- ENGINEER
FLORIDA LICENSE #89925
FLORIDA STATE CERTIFICATE
OF AUTHORITY #RY34386

JERRY TRAVIS MILLER
No 89925
STATE OF
FLORIDA
PROFESSIONAL ENGINEER
11/6/23

MAT'L	A569 HRS F GA.	
DRAWN	BFS	5/22/13
DESIGNER	BFS	SHEET 3 OF 14

DO NOT SCALE DRAWING
TOLERANCES UNLESS OTHERWISE NOTED

DECIMAL	FRACTIONAL
.XX=±.063"	≤12"=±1/16"
.XXX=±.010"	>12" THRU 96"=±1/8"
.XXXX=±.001"	>96" THRU 144"=±1/4"
ANGULAR ±2°	>144"=±3/8"
	(NC)=NO INSPECTION REQ'D

LOREN COOK CO.
MANUFACTURERS OF AIR MOVING EQUIPMENT
SPRINGFIELD, MISSOURI

CP PEDISTAL SIDE (60-180)
CPV/CPS/CPF
HURRICANE RATED

SIZE	DRAWING NO.	REV.
B	SD130522-18	D

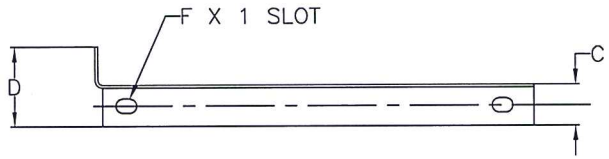

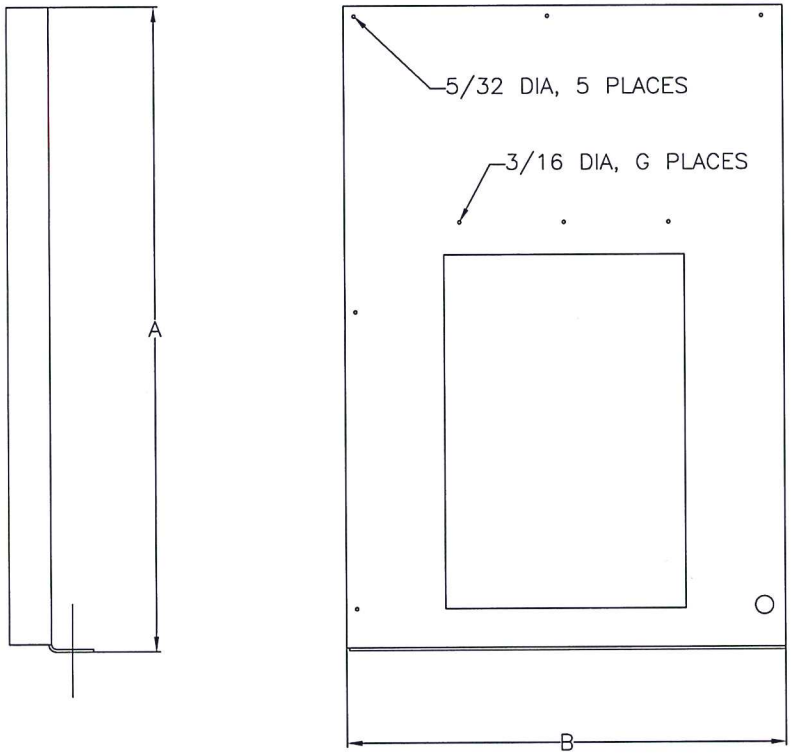

490	55 1/8	28	2	3 13/16	7 GA.	13/16	3
445	50 1/4	28	2	3 13/16	7 GA.	13/16	3
402	45 5/8	24	2	3 13/16	7 GA.	13/16	3
365	41 7/8	24	2	3 13/16	7 GA.	11/16	3
330	38	21	2	3 13/16	7 GA.	11/16	3
300	34 3/4	21	2	3 13/16	7 GA.	9/16	2
270	31 11/16	21	2	3 7/8	10 GA.	9/16	2
245/250	28 15/16	18	2	3 7/8	10 GA.	9/16	2
220/225	26 5/16	18	1 1/2	2 7/8	10 GA.	9/16	2
210	24 11/16	18	1 1/2	2 7/8	10 GA.	9/16	2
195	23	18	1 1/2	2 7/8	10 GA.	7/16	2
UNIT	A	B	C	D	E	F	G
SIZE	DIM	DIM	DIM	DIM	DIM	DIM	DIM

NOTES:
1. 2 REQUIRED, BEND ONE OPPOSITE

PRODUCT REVISED
As complying with the Florida Building Code
NOA-No. 24-0912.04
Expiration Date: 12/19/2029
By: Manuel Perez
Miami-Dade Product Control

PRODUCT REVISED
as complying with the Florida Building Code
NOA-No. 23-0821.06
Expiration Date 12/19/2024
By
Miami-Dade Product Control

JERRY TRAVIS MILLER- ENGINEER
FLORIDA LICENSE #89925
FLORIDA STATE CERTIFICATE
OF AUTHORITY #RY34386

JERRY TRAVIS MILLER
No 89925
STATE OF
FLORIDA
PROFESSIONAL ENGINEER
11/6/23

MAT'L	A1011 SHEET STL, E GA.	
DRAWN	BFS	5/22/13
DESIGNER	BFS	SHEET 4 OF 14

DO NOT SCALE DRAWING
TOLERANCES UNLESS OTHERWISE NOTED

DECIMAL	FRACTIONAL
.XX=±.063"	≤12"=±1/16"
.XXX=±.010"	>12" THRU 96"=±1/8"
.XXXX=±.001"	>96" THRU 144"=±1/4"
	>144"=±3/8"
ANGULAR ±2°	(NC)=NO INSPECTION REQ'D

LOREN COOK CO.
MANUFACTURERS OF AIR MOVING EQUIPMENT
SPRINGFIELD, MISSOURI

PEDESTAL SIDE PANEL
CPV/CPS/CPF
HURRICANE RATED

SIZE	DRAWING NO.	REV.
B	SD130522-18	D

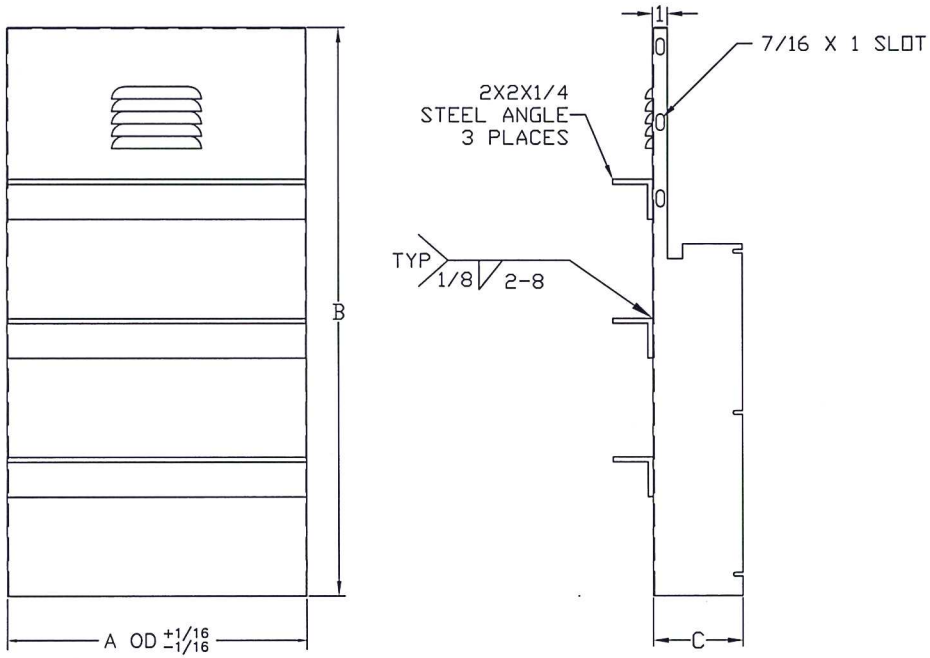

490	44	83 5/8	7	18GA
445	40	76 1/4	7	18GA
402	36	69 5/8	7	18GA
365	32	63 5/8	7	18GA
330	30	57 3/4	6	18GA
300	27	53	6	18GA
270	25	48 1/4	6	18GA
245/250	23	44	6	18GA
220/225	21	40 3/8	6	18GA
210	20	38 1/4	6	18GA
195	18	35 1/8	5	18GA
180	18	33	5	18GA
165	16	30 7/8	5	18GA
150	16	28 1/2	5	18GA
135	16	26 3/8	5	18GA
120	16	25 5/8	5	18GA
60–100	16	24 11/16	5	18GA
UNIT	A	B	C	MATERIAL
SIZE	DIM	DIM	DIM	GAUGE

JERRY TRAVIS MILLER- ENGINEER
FLORIDA LICENSE #89925
FLORIDA STATE CERTIFICATE
OF AUTHORITY #RY34386

JERRY TRAVIS MILLER
No 89925
STATE OF
FLORIDA
PROFESSIONAL ENGINEER
11/16/23

PRODUCT REVISED
As complying with the Florida Building Code
NOA-No. 24-0912.04
Expiration Date: 12/19/2029
By: Manuel Perez
Miami-Dade Product Control

PRODUCT REVISED
as complying with the Florida Building Code
NOA-No. 23-0821.06
Expiration Date 12/19/2024
By
Miami-Dade Product Control

MAT'L	A1011 SHEET/A36 ANGLE	
DRAWN	BFS	5/22/13
DESIGNER	BFS	SHEET 5 OF 14

DO NOT SCALE DRAWING
TOLERANCES UNLESS OTHERWISE NOTED

DECIMAL	FRACTIONAL
.XX=±.063"	≤12"=±1/16"
.XXX=±.010"	>12" THRU 96"=±1/8"
.XXXX=±.001"	>96" THRU 144"=±1/4"
	>144"=±3/8"
ANGULAR ±2'	(NC)=NO INSPECTION REQ'D

LOREN COOK CO.
MANUFACTURERS OF AIR MOVING EQUIPMENT
SPRINGFIELD, MISSOURI

WEATHER COVER FRONT
CPV/CPS/CPF
HURRICANE RATED

SIZE	DRAWING NO.	REV.
B	SD130522-18	D

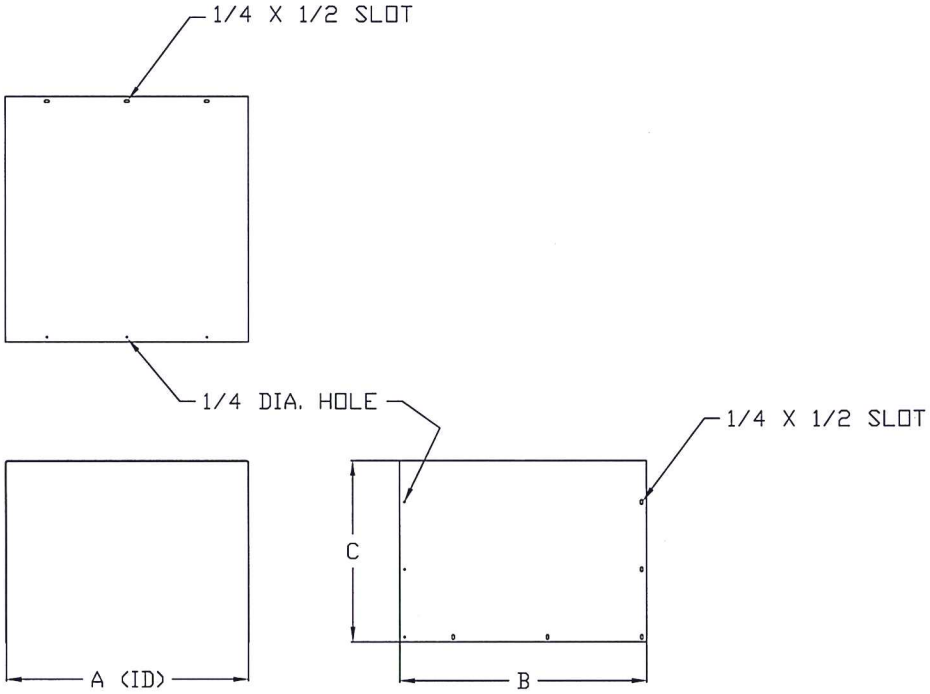

490	44 1/4	34 3/16	30 3/8	16 GA
445	40 1/4	34 3/16	27 7/8	16 GA
402	36 1/4	30 3/16	25 7/8	16 GA
365	32 1/4	30 3/16	23 5/8	16 GA
330	30 1/4	26 3/16	21 5/8	16 GA
300	27 1/4	26 3/16	20 1/8	16 GA
270	25 1/4	26 3/16	18 7/16	16 GA
245/250	23 1/8	23 3/16	16 15/16	16 GA
220/225	21 1/16	23 3/16	15 15/16	16 GA
210	20 1/16	23 3/16	15 7/16	16 GA
195	18 1/16	22 3/16	13 15/16	16 GA
180	18 1/16	19 3/16	13 7/16	16 GA
165	16 1/16	19 3/16	12 9/16	16 GA
150	16 1/16	19 3/16	11 9/16	16 GA
135	16 1/16	19 3/16	10 9/16	16 GA
120	16 1/16	17 3/16	9 13/16	16 GA
60-100	16 1/16	17 3/16	8 13/16	16 GA
UNIT	A	B	C	MATERIAL
SIZE	DIM	DIM	DIM	GAUGE

PRODUCT REVISED
As complying with the Florida Building Code
NOA-No. 24-0912.04
Expiration Date: 12/19/2029
By: Manuel Perez
Miami-Dade Product Control

PRODUCT REVISED
as complying with the Florida Building Code
NOA-No. 23-0821.06
Expiration Date 12/19/2024
By
Miami-Dade Product Control

JERRY TRAVIS MILLER- ENGINEER
FLORIDA LICENSE #89925
FLORIDA STATE CERTIFICATE
OF AUTHORITY #RY34386

JERRY TRAVIS MILLER
No 89925
STATE OF
FLORIDA
PROFESSIONAL ENGINEER
11/6/23

MAT'L	A-1011 CS-B	
DRAWN	BFS	5/22/13
DESIGNER	BFS	SHEET 6 OF 14

DO NOT SCALE DRAWING
TOLERANCES UNLESS OTHERWISE NOTED

DECIMAL	FRACTIONAL
.XX=±.063"	≤12"=±1/16"
.XXX=±.010"	>12" THRU 96"=±1/8"
.XXXX=±.001"	>96" THRU 144"=±1/4"
ANGULAR ±2°	>144"=±3/8"
	(NC)=NO INSPECTION REQ'D

LOREN COOK CO.
MANUFACTURERS OF AIR MOVING EQUIPMENT
SPRINGFIELD, MISSOURI

CP WEATHER COVER CAP
CPV/CPS/CPF
HURRICANE RATED

SIZE	DRAWING NO.	REV.
B	SD130522-18	D

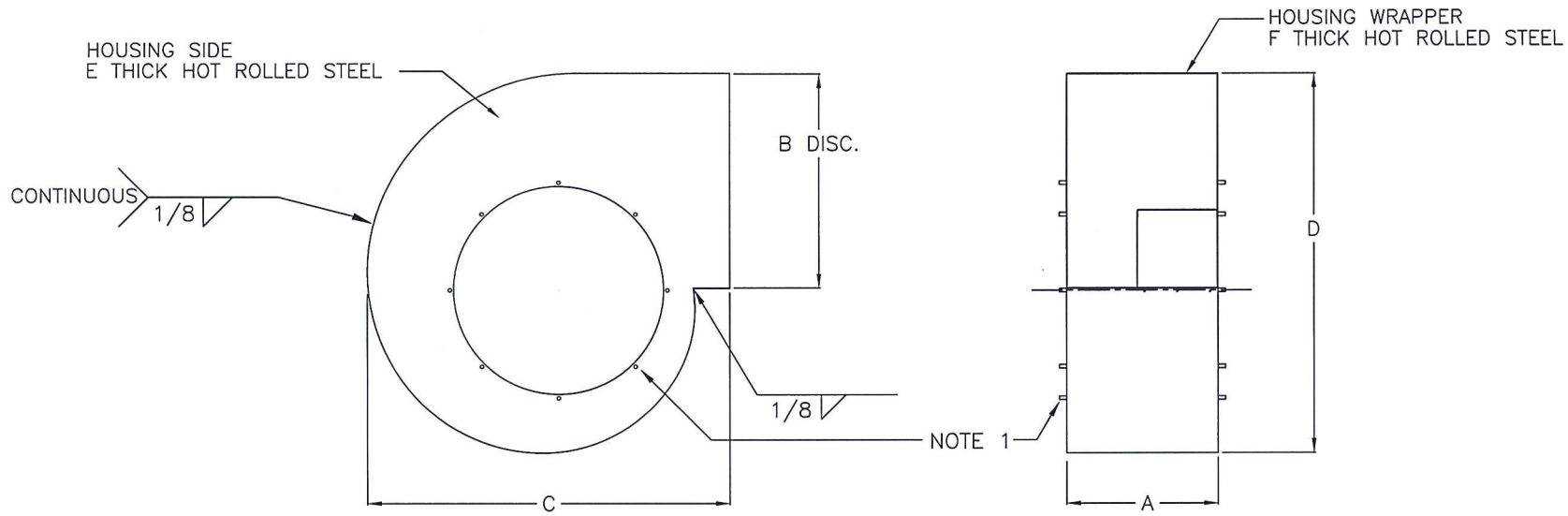

490	37 7/16	53 5/8	88 3/4	93 5/16	10 GA.	12 GA.
445	34	48 11/16	80 9/16	84 3/4	10 GA.	12 GA.
402	30 3/4	44 1/16	72 15/16	76 11/16	10 GA.	12 GA.
365	27 7/8	39 15/16	66 1/8	69 5/8	10 GA.	12 GA.
330	25 1/4	36 1/8	59 13/16	62 15/16	10 GA.	12 GA.
300	22 15/16	32 13/16	54 3/8	57	10 GA.	12 GA.
270	20 5/8	29 9/16	49 1/16	51 5/16	12 GA.	14 GA.
245/250	18 3/4	26 13/16	45 1/16	46 1/2	12 GA.	14 GA.
220/225	17 3/16	24 5/8	42	42 13/16	12 GA.	14 GA.
210	16 1/16	23	39 15/16	40 1/16	12 GA.	14 GA.
195	14 15/16	21 5/16	36 5/16	37 1/8	12 GA.	14 GA.
180	13 3/4	19 11/16	34 3/4	34 3/16	12 GA.	14 GA.
165	12 5/8	18 1/16	32 1/16	31 5/16	12 GA.	14 GA.
150	11 7/16	16 7/16	29 9/16	29 1/2	12 GA.	14 GA.
135	10 5/16	14 3/4	26 11/16	25 3/4	12 GA.	14 GA.
120	9 3/16	13 1/8	24 13/16	22 13/16	12 GA.	14 GA.
60–100	7 9/16	10 15/16	22 1/4	19	12 GA.	14 GA.
UNIT	A	B	C	D	E	F
SIZE	DIM	DIM	DIM	DIM	DIM	DIM

NOTES
1) 3/8-16 WELD NUT, C1008 STL, 8 PLACES, SIZES 60-300
1/2-13 WELD STUD, C1008 STL, 8 PLACES, SIZES 330-490
BOTH SIDES

PRODUCT REVISED
As complying with the Florida Building Code
NOA-No. 24-0912.04
Expiration Date: 12/19/2029
By: Manuel Perez
Miami-Dade Product Control

PRODUCT REVISED
as complying with the Florida Building Code
NOA-No. 23-0821.06
Expiration Date 12/19/2024
By
Miami-Dade Product Control

JERRY TRAVIS MILLER- ENGINEER
FLORIDA LICENSE #89925
FLORIDA STATE CERTIFICATE
OF AUTHORITY #RY34386

JERRY TRAVIS MILLER
No 89925
STATE OF
FLORIDA
PROFESSIONAL ENGINEER
11/6/23

MAT'L	HR STEEL – ASTM A1011	
DRAWN	BFS	5/22/13
DESIGNER	BFS	SHEET 7 OF 14

DO NOT SCALE DRAWING
TOLERANCES UNLESS OTHERWISE NOTED

DECIMAL	FRACTIONAL
.XX=±.063"	≤12"=±1/16"
.XXX=±.010"	>12" THRU 96"=±1/8"
.XXXX=±.001"	>96" THRU 144"=±1/4"
ANGULAR ±2°	>144"=±3/8"

(NC)=NO INSPECTION REQ'D

LOREN COOK CO.
MANUFACTURERS OF AIR MOVING EQUIPMENT
SPRINGFIELD, MISSOURI

CP FAN HOUSING
CPV/CPS/CPF
HURRICANE RATED

SIZE	DRAWING NO.	REV.
B	SD130522-18	D

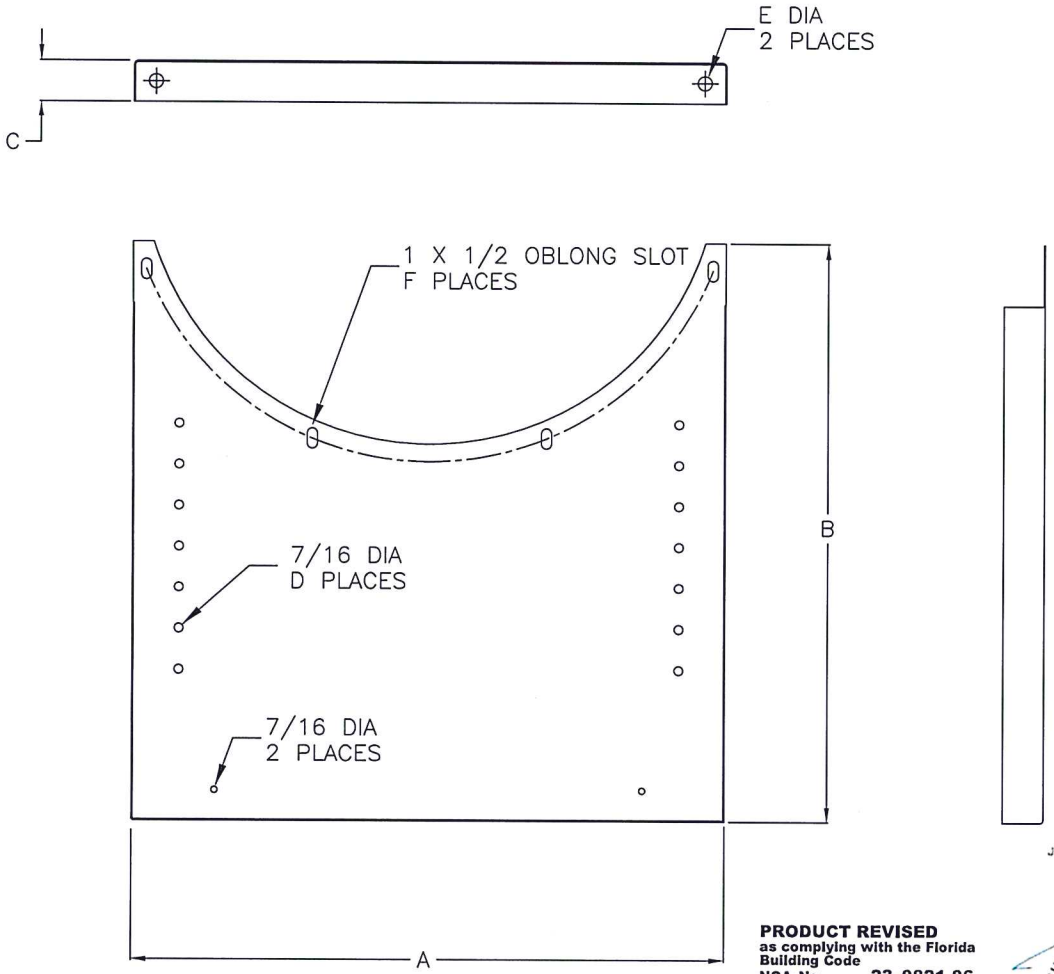

490	45 3/8	47 5/8	3	26	13/16	3	14 GA.
445	42 9/16	43 5/8	3	24	13/16	3	14 GA.
402	38 11/16	39 5/8	3	22	13/16	3	14 GA.
365	33 15/16	35 5/8	2	18	13/16	3	14 GA.
330	32 15/16	33 5/8	2	18	13/16	3	14 GA.
300	30 1/16	30 5/8	2	16	11/16	3	14 GA.
270	28 1/4	28 3/4	2	16	11/16	3	16 GA.
245/250	26 5/16	26 3/4	2	16	11/16	3	16 GA.
220/225	22 15/16	22 3/4	1 1/2	14	9/16	3	16 GA.
210	22	22 3/4	1 1/2	14	9/16	4	16 GA.
195	20 1/4	20 3/4	1 1/2	12	9/16	3	16 GA.
180	17 5/16	20 3/4	1 1/2	12	9/16	3	16 GA.
165	16 7/16	18 3/4	1 1/2	12	9/16	3	16 GA.
150	17 1/8	18 3/4	1 1/2	12	9/16	3	16 GA.
135	17	18 3/4	1 1/2	12	9/16	4	16 GA.
120	17	18 3/4	1 1/2	14	9/16	3	16 GA.
60–100	17	18 3/4	1 1/2	12	9/16	3	16 GA.
UNIT	A	B	C	D	E	F	MATERIAL
SIZE	DIM	DIM	DIM	DIM	DIM	DIM	GAUGE

PRODUCT REVISED
As complying with the Florida Building Code
NOA-No. 24-0912.04
Expiration Date: 12/19/2029
By: Manuel Perez
Miami-Dade Product Control

PRODUCT REVISED
as complying with the Florida Building Code
NOA-No. 23-0821.06
Expiration Date 12/19/2024
By
Miami-Dade Product Control

JERRY TRAVIS MILLER- ENGINEER
FLORIDA LICENSE #89925
FLORIDA STATE CERTIFICATE
OF AUTHORITY #RY34386

JERRY TRAVIS MILLER
No 89925
STATE OF
FLORIDA
PROFESSIONAL ENGINEER
11/6/23

MAT'L	ASTM A1011 HR STEEL	
DRAWN	BFS	5/22/13
DESIGNER	BFS	SHEET 8 OF 14

DO NOT SCALE DRAWING
TOLERANCES UNLESS OTHERWISE NOTED

DECIMAL	FRACTIONAL
.XX=±.063"	≤12"=±1/16"
.XXX=±.010"	>12" THRU 96"=±1/8"
.XXXX=±.001"	>96" THRU 144"=±1/4"
ANGULAR ±2°	>144"=±3/8"
	(NC)=NO INSPECTION REQ'D

LOREN COOK CO.
MANUFACTURERS OF AIR MOVING EQUIPMENT
SPRINGFIELD, MISSOURI

CP INLET PEDISTAL SIDE
CPV/CPS/CPF
HURRICANE RATED

SIZE	DRAWING NO.	REV.
B	SD130522-18	D

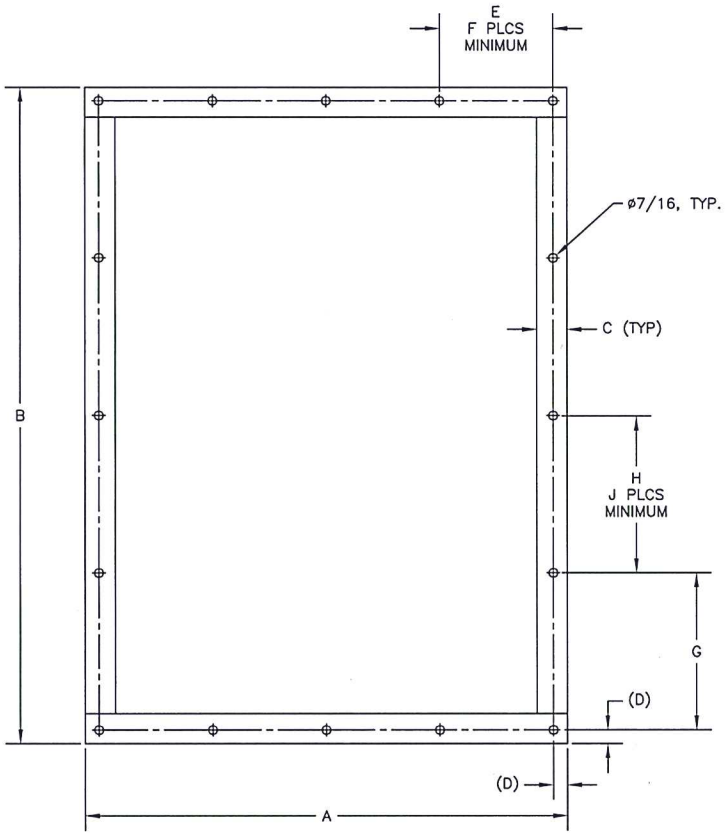

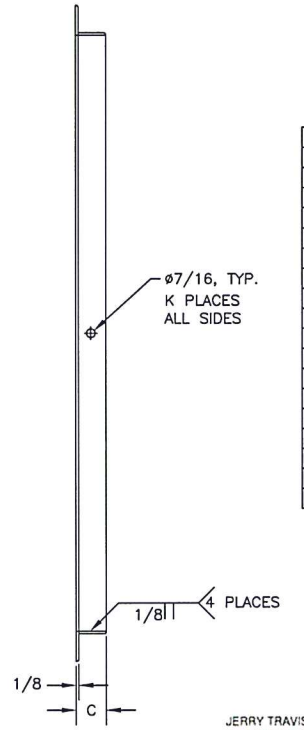

490	41 5/8	57 7/8	2	1 3/16	9 13/16	3	13 1/16	13 7/8	2	3
445	38 3/16	52 15/16	2	1 3/16	8 15/16	3	11 13/16	12 21/32	2	3
402	34 15/16	48 5/16	2	1 3/16	8 1/8	3	10 21/32	11 1/2	2	3
365	32 1/16	44 3/16	2	1 3/16	7 7/16	3	9 5/8	10 15/32	2	3
330	29 7/16	40 5/16	2	1 3/16	6 3/4	3	8 21/32	9 1/2	2	3
300	27 3/16	37	2	1 3/16	6 3/16	3	7 27/32	8 21/32	2	2
270	24 7/8	33 3/4	2	1 3/16	11 1/4	1	7 1/32	7 27/32	2	2
245/250	23	31	2	1 3/16	10 5/16	1	6 11/32	7 5/32	2	2
220/225	20 7/16	27 13/16	1 1/2	11/16	9 9/16	1	5 25/32	6 5/8	2	2
210	19 5/16	26 3/16	1 1/2	11/16	9	1	5 3/8	6 7/32	2	1
195	18 3/16	24 1/2	1 1/2	11/16	8 7/16	1	10 3/4	–	–	1
180	16 15/16	22 7/8	1 1/2	11/16	7 13/16	1	9 15/16	–	–	1
165	15 13/16	21 1/4	1 1/2	11/16	7 1/4	1	9 1/8	–	–	1
150	14 5/8	19 5/8	1 1/2	11/16	6 5/8	1	8 5/16	–	–	1
135	13 1/2	17 15/16	1 1/2	11/16	6 1/16	1	7 15/32	–	–	1
120	12 3/8	16 5/16	1 1/2	11/16	–	–	6 21/32	–	–	1
60–100	10 3/4	14 1/16	1 1/2	11/16	–	–	5 17/32	–	–	1
UNIT	A	B	C	D	E	F	G	H	J	K
SIZE	DIM	DIM	DIM	DIM	DIM	DIM	DIM	DIM	DIM	DIM

PRODUCT REVISED
As complying with the Florida Building Code
NOA-No. 24-0912.04
Expiration Date: 12/19/2029
By: Manuel Perez
Miami-Dade Product Control

PRODUCT REVISED
as complying with the Florida Building Code
NOA-No. 23-0821.06
Expiration Date 12/19/2024
By
Miami-Dade Product Control

JERRY TRAVIS MILLER- ENGINEER
FLORIDA LICENSE #89925
FLORIDA STATE CERTIFICATE
OF AUTHORITY #RY34386

JERRY TRAVIS MILLER
No 89925
STATE OF
FLORIDA
PROFESSIONAL ENGINEER
11/16/23

MAT'L	A36 STEEL ANGLE	
DRAWN	BFS	5/22/13
DESIGNER	BFS	SHEET 9 OF 14

DO NOT SCALE DRAWING
TOLERANCES UNLESS OTHERWISE NOTED

DECIMAL	FRACTIONAL
.XX=±.063"	≤12"=±1/16"
.XXX=±.010"	>12" THRU 96"=±1/8"
.XXXX=±.001"	>96" THRU 144"=±1/4"
ANGULAR ±2°	>144"=±3/8"

(NC)=NO INSPECTION REQ'D

LOREN COOK CO.
MANUFACTURERS OF AIR MOVING EQUIPMENT
SPRINGFIELD, MISSOURI

CP DISCHARGE FLANGE
CPV/CPS/CPF
HURRICANE RATED

SIZE	DRAWING NO.	REV.
B	SD130522-18	D

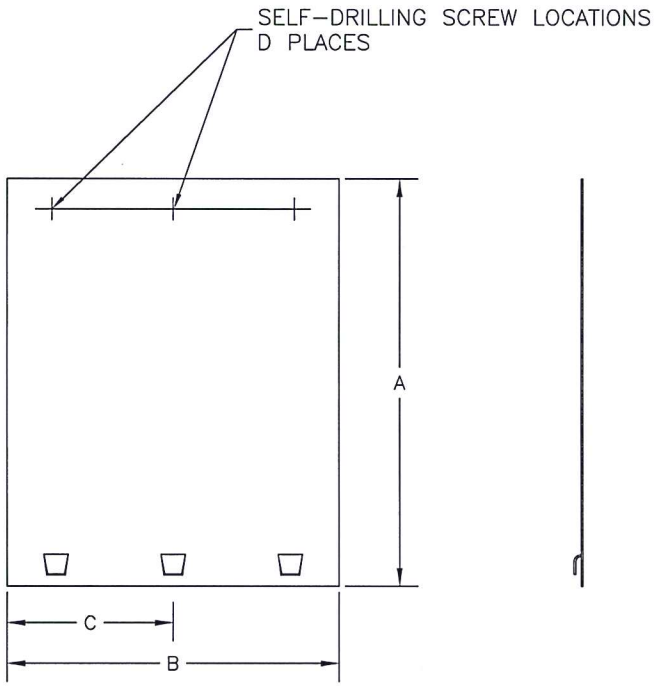

445–490	26 1/8	19 3/8	9 11/16	3	16
300–402	21 1/4	17	8 1/2	3	16
220–270	18 1/2	13	–	2	16
180–210	15 5/8	9	–	2	16
60–165	10 1/2	8 1/2	–	2	16
UNIT	A	B	C	D	MATERIAL
SIZE	DIM	DIM	DIM	DIM	GAUGE

PRODUCT REVISED
As complying with the Florida Building Code
NOA-No. 24-0912.04
Expiration Date: 12/19/2029
By: Manuel Perez
Miami-Dade Product Control

PRODUCT REVISED
as complying with the Florida Building Code
NOA-No. 23-0821.06
Expiration Date 12/19/2024
By
Miami-Dade Product Control

JERRY TRAVIS MILLER- ENGINEER
FLORIDA LICENSE #89925
FLORIDA STATE CERTIFICATE
OF AUTHORITY #RY34386

JERRY TRAVIS MILLER
No 89925
STATE OF
FLORIDA
PROFESSIONAL ENGINEER
11/6/23

MAT'L	ASTM A1011 HR SHEET	
DRAWN	BFS	5/22/13
DESIGNER	BFS	SHEET 10 OF 14

DO NOT SCALE DRAWING
TOLERANCES UNLESS OTHERWISE NOTED

DECIMAL	FRACTIONAL
.XX=±.063"	≤12"=±1/16"
.XXX=±.010"	>12" THRU 96"=±1/8"
.XXXX=±.001"	>96" THRU 144"=±1/4"
ANGULAR ±2°	>144"=±3/8"
	(NC)=NO INSPECTION REQ'D

LOREN COOK CO.
MANUFACTURERS OF AIR MOVING EQUIPMENT
SPRINGFIELD, MISSOURI

CP PEDESTAL SIDE COVER
CPV/CPS/CPF
HURRICANE RATED

SIZE	DRAWING NO.	REV.
B	SD130522-18	D

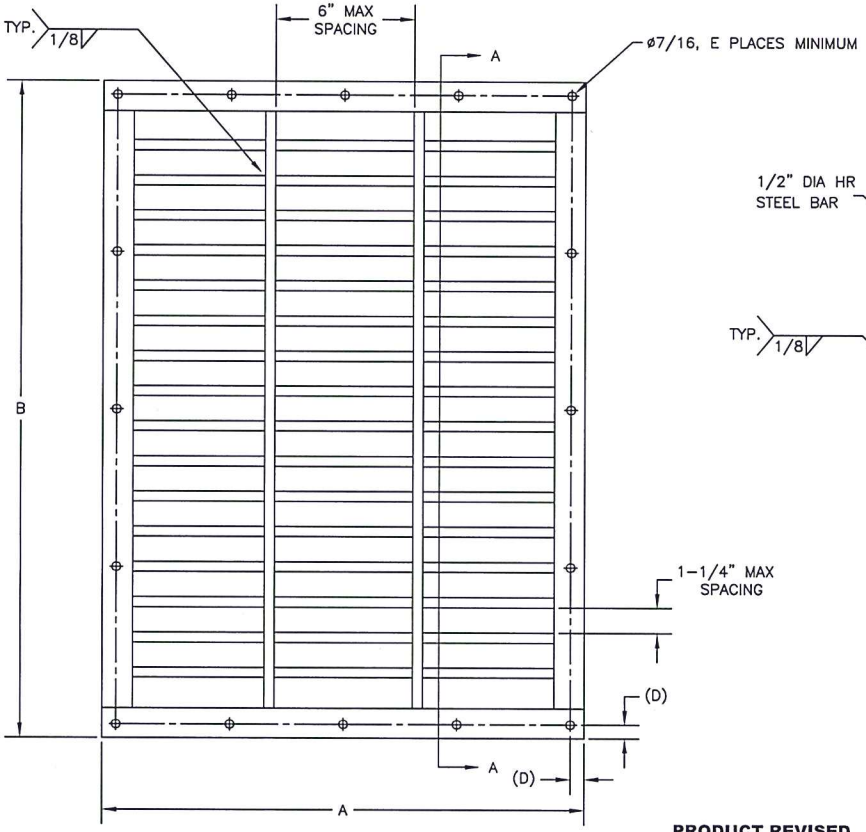

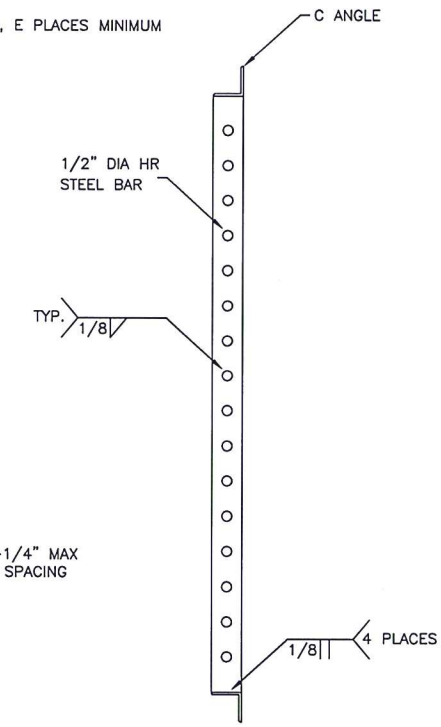

SEC A-A

490	41 5/8	57 7/8	2 X 2 X 1/8 STEEL ANGLE	1 3/16	16
445	38 3/16	52 15/16	2 X 2 X 1/8 STEEL ANGLE	1 3/16	16
402	34 15/16	48 5/16	2 X 2 X 1/8 STEEL ANGLE	1 3/16	16
365	32 1/16	44 3/16	2 X 2 X 1/8 STEEL ANGLE	1 3/16	16
330	29 7/16	40 5/16	2 X 2 X 1/8 STEEL ANGLE	1 3/16	16
300	27 3/16	37	2 X 2 X 1/8 STEEL ANGLE	1 3/16	16
270	24 7/8	33 3/4	2 X 2 X 1/8 STEEL ANGLE	1 3/16	12
245/250	23	31	2 X 2 X 1/8 STEEL ANGLE	1 3/16	12
220/225	20 7/16	27 13/16	1 1/2 X 1 1/2 X 1/8 STEEL ANGLE	11/16	12
210	19 5/16	26 3/16	1 1/2 X 1 1/2 X 1/8 STEEL ANGLE	11/16	12
195	18 3/16	24 1/2	1 1/2 X 1 1/2 X 1/8 STEEL ANGLE	11/16	8
180	16 15/16	22 7/8	1 1/2 X 1 1/2 X 1/8 STEEL ANGLE	11/16	8
165	15 13/16	21 1/4	1 1/2 X 1 1/2 X 1/8 STEEL ANGLE	11/16	8
150	14 5/8	19 5/8	1 1/2 X 1 1/2 X 1/8 STEEL ANGLE	11/16	8
135	13 1/2	17 15/16	1 1/2 X 1 1/2 X 1/8 STEEL ANGLE	11/16	8
120	12 3/8	16 5/16	1 1/2 X 1 1/2 X 1/8 STEEL ANGLE	11/16	8
60-100	10 3/4	14 1/16	1 1/2 X 1 1/2 X 1/8 STEEL ANGLE	11/16	6
UNIT	A	B	C	D	E
SIZE	DIM	DIM	DIM	DIM	DIM

PRODUCT REVISED
As complying with the Florida Building Code
NOA-No. 24-0912.04
Expiration Date: 12/19/2029
By: Manuel Perez
Miami-Dade Product Control

PRODUCT REVISED
as complying with the Florida Building Code
NOA-No. 23-0821.06
Expiration Date 12/19/2024
By
Miami-Dade Product Control

JERRY TRAVIS MILLER- ENGINEER
FLORIDA LICENSE #89925
FLORIDA STATE CERTIFICATE
OF AUTHORITY #RY34386

JERRY TRAVIS MILLER
No 89925
STATE OF FLORIDA
PROFESSIONAL ENGINEER
11/6/23

NOTES:
1. OUTLET GUARD REQUIRED WHEN FAN OUTLET IS EXPOSED TO OUTDOOR CONDITIONS.

MAT'L	ASTM A36	
DRAWN	BFS	5/22/13
DESIGNER	BFS	SHEET 11 OF 14

DO NOT SCALE DRAWING
TOLERANCES UNLESS OTHERWISE NOTED

DECIMAL	FRACTIONAL
.XX=±.063"	≤12"=±1/16"
.XXX=±.010"	>12" THRU 96"=±1/8"
.XXXX=±.001"	>96" THRU 144"=±1/4"
ANGULAR ±2'	>144"=±3/8"
	(NC)=NO INSPECTION REQ'D

LOREN COOK CO.
MANUFACTURERS OF AIR MOVING EQUIPMENT
SPRINGFIELD, MISSOURI

CP DISCHARGE GUARD
CPV/CPS/CPF
HURRICANE RATED

SIZE	DRAWING NO.	REV.
B	SD130522-18	D

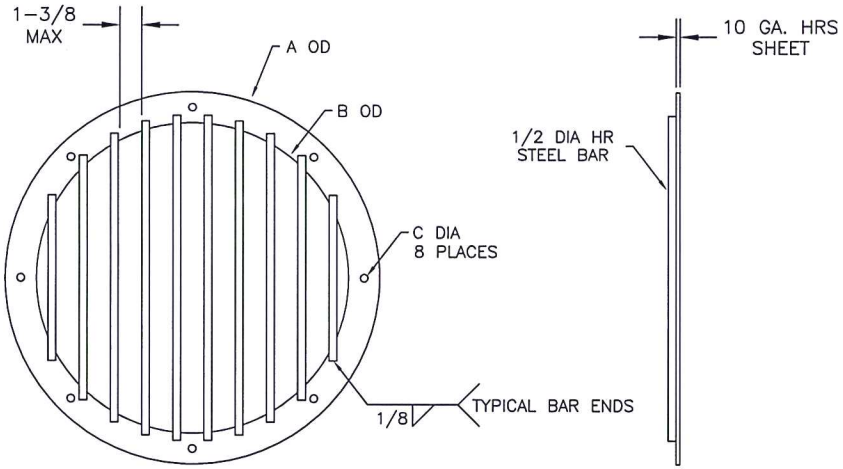

490	54 1/4	50 1/4	3/4
445	48 3/4	44 3/4	3/4
402	44 1/2	40 1/2	3/4
365	40 3/4	36 3/4	3/4
330	37 1/4	33 1/4	3/4
300	34 1/4	30 1/4	5/8
270	31 1/4	27 1/4	5/8
245/250	28 3/4	25 3/4	5/8
220/225	26 3/4	23 3/4	5/8
210	25 1/4	22 1/4	5/8
195	23 1/2	20 1/2	5/8
180	21 3/4	18 3/4	5/8
165	20 1/4	17 1/4	5/8
150	18 1/2	15 1/2	5/8
135	17	14	5/8
120	15 1/2	12 1/2	5/8
60-100	13 1/2	10 1/2	5/8
UNIT	A	B	C
SIZE	DIM	DIM	DIM

NOTES:
INLET GUARD REQUIRED WHEN FAN INLET IS EXPOSED TO OUTDOOR CONDITIONS.

PRODUCT REVISED
As complying with the Florida Building Code
NOA-No. 24-0912.04
Expiration Date: 12/19/2029
By: Manuel Perez
Miami-Dade Product Control

PRODUCT REVISED
as complying with the Florida Building Code
NOA-No. 23-0821.06
Expiration Date 12/19/2024
By
Miami-Dade Product Control

JERRY TRAVIS MILLER- ENGINEER
FLORIDA LICENSE #89925
FLORIDA STATE CERTIFICATE
OF AUTHORITY #RY34386

JERRY TRAVIS MILLER
No 89925
STATE OF
FLORIDA
PROFESSIONAL ENGINEER
11/16/23

MAT'L	ASTM A1011	
DRAWN	BFS	5/22/13
DESIGNER	BFS	SHEET 12 OF 14

DO NOT SCALE DRAWING
TOLERANCES UNLESS OTHERWISE NOTED

DECIMAL	FRACTIONAL
.XX=±.063"	≤12"=±1/16"
.XXX=±.010"	>12" THRU 96"=±1/8"
.XXXX=±.001"	>96" THRU 144"=±1/4"
ANGULAR ±2°	>144"=±3/8"
	(NC)=NO INSPECTION REQ'D

LOREN COOK CO.
MANUFACTURERS OF AIR MOVING EQUIPMENT
SPRINGFIELD, MISSOURI

CP INLET GUARD
CPV/CPS/CPF
HURRICANE RATED

SIZE	DRAWING NO.	REV.
B	SD130522-18	D

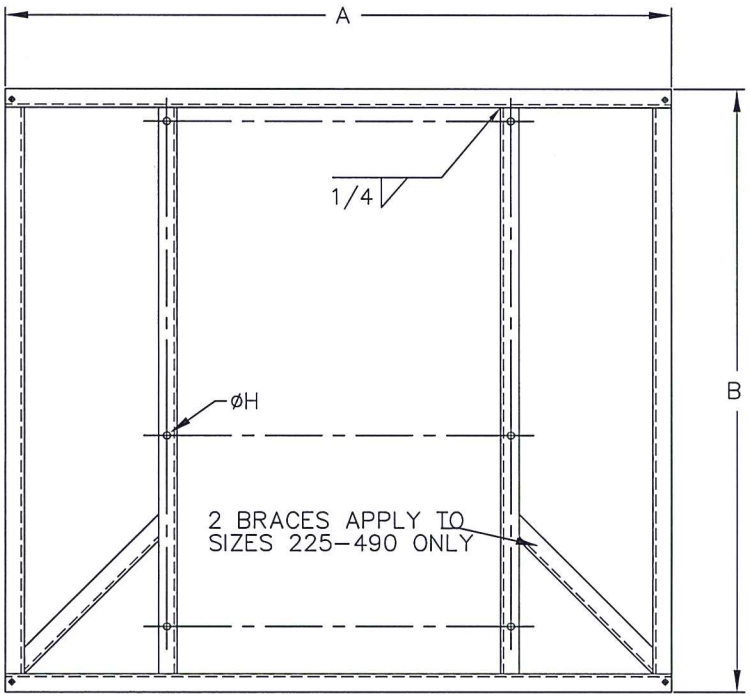

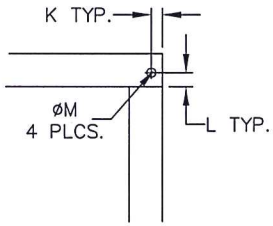

SIZE	A	B	H	K	L	M	CHANNEL
60–100	21–3/4	29–11/16	7/16	7/8	7/8	9/16	C3x4.1
120	26–1/8	31–5/16	7/16	7/8	7/8	9/16	C3x4.1
135	29–3/8	34–7/16	7/16	7/8	7/8	9/16	C3x4.1
150	32–5/8	35–9/16	7/16	7/8	7/8	9/16	C3x4.1
165	35–7/8	36–3/4	7/16	7/8	7/8	9/16	C3x4.1
180	39–1/8	37–15/16	7/16	7/8	7/8	9/16	C3x4.1
195	42–3/8	42–1/8	7/16	7/8	31/32	9/16	C4x5.4
210	45–5/8	44–1/4	9/16	7/8	31/32	9/16	C4x5.4
225	48–7/8	45–7/16	9/16	7/8	31/32	9/16	C4x5.4
245	53–1/4	47–7/16	9/16	7/8	31/32	9/16	C4x5.4
270	58–1/2	52–5/16	9/16	7/8	1	9/16	C5x6.7
300	65–1/4	55–5/16	9/16	7/8	1	9/16	C5x6.7
330	71–3/4	57–1/16	11/16	7/8	1	9/16	C5x6.7
365	79–3/8	63–5/8	11/16	7/8	1–1/8	9/16	C6x10.5
402	87–5/8	67–15/16	13/16	1–1/8	1–1/8	3/4	C6x10.5
445	97	75–3/16	13/16	1–1/8	1–1/8	3/4	C6x10.5
490	106–5/8	79	13/16	1–1/8	1–3/8	3/4	C8x11.5

PRODUCT REVISED
As complying with the Florida Building Code
NOA-No. 24-0912.04
Expiration Date: 12/19/2029
By: Manuel Perez
Miami-Dade Product Control

PRODUCT REVISED
as complying with the Florida Building Code
NOA-No. 23-0821.06
Expiration Date 12/19/2024
By
Miami-Dade Product Control

JERRY TRAVIS MILLER- ENGINEER
FLORIDA LICENSE #89925
FLORIDA STATE CERTIFICATE
OF AUTHORITY #RY34386

JERRY TRAVIS MILLER
No 89925
STATE OF
FLORIDA
PROFESSIONAL ENGINEER
11/6/23

MAT'L	ASTM A36	
DRAWN	BFS	5/22/13
DESIGNER	BFS	SHEET 13 OF 14

DO NOT SCALE DRAWING
TOLERANCES UNLESS OTHERWISE NOTED

DECIMAL	FRACTIONAL
.XX=±.063"	≤12"=±1/16"
.XXX=±.010"	>12" THRU 96"=±1/8"
.XXXX=±.001"	>96" THRU 144"=±1/4"
ANGULAR ±2°	>144"=±3/8"
	(NC)=NO INSPECTION REQ'D

LOREN COOK CO.
MANUFACTURERS OF AIR MOVING EQUIPMENT
SPRINGFIELD, MISSOURI

CP RAILS AND BASE
CPV/CPS/CPF
HURRICANE RATED

SIZE	DRAWING NO.	REV.
B	SD130522–18	D

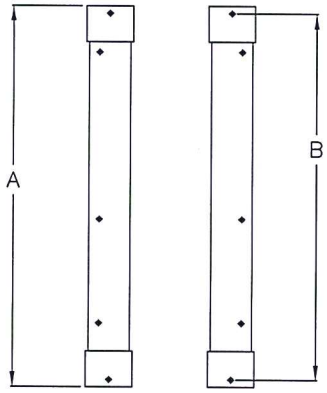

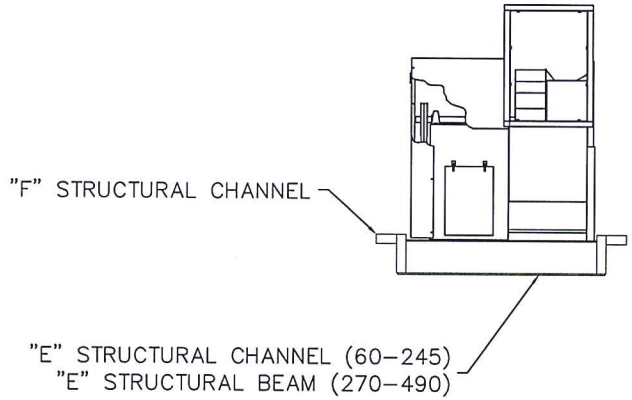

SIZE	A	B	C	D	E	F
60–100	42–3/8	36–7/8	3	11/16	(2) C3x4.1	C3x4.1
120	44	38–1/2	3	11/16	(2) C3x4.1	C3x4.1
135	47–1/8	41–5/8	3	11/16	(2) C3x4.1	C3x4.1
150	48–1/4	42–3/4	3	11/16	(2) C3x4.1	C3x4.1
165	49–1/2	44	3	11/16	(2) C3x4.1	C3x4.1
180	50–9/16	45–1/16	3	11/16	(2) C3x4.1	C3x4.1
195	54–3/4	49–1/4	3	11/16	(2) C3x4.1	C3x4.1
210	56–7/8	51–3/8	3	11/16	(2) C3x4.1	C3x4.1
225	58	52–1/2	3	11/16	(2) C3x4.1	C3x4.1
245	60–1/16	54–9/16	3	11/16	(2) C3x4.1	C3x4.1
270	65	59–1/2	4	11/16	W6x9	C4x5.4
300	67–7/16	61–15/16	4	11/16	W6x9	C4x5.4
330	69–3/4	64–1/4	4	11/16	W6x9	C4x5.4
365	76–3/8	70–7/8	4	11/16	W6x9	C4x5.4
402	80–1/4	74–3/4	4	11/16	W6x9	C4x5.4
445	87–1/2	82	4	11/16	W6x9	C4x5.4
490	90–15/16	85–7/16	4	11/16	W6x9	C4x5.4

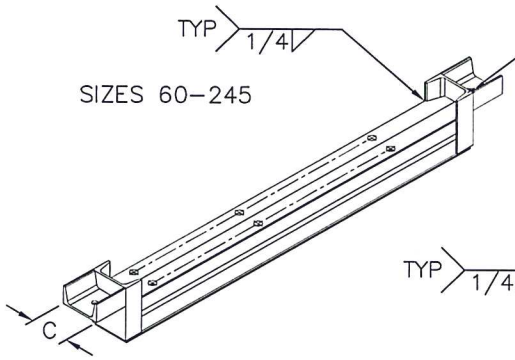

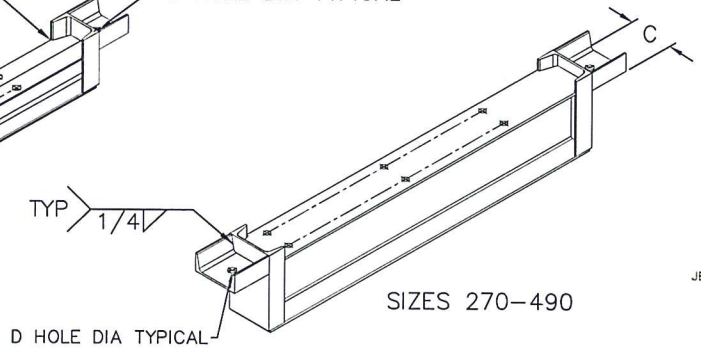

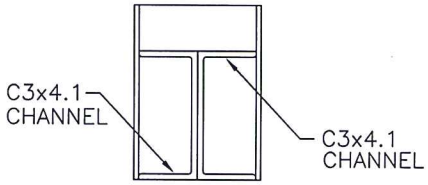

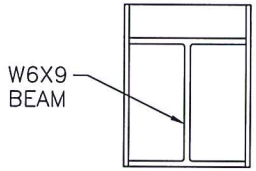

PRODUCT REVISED
As complying with the Florida Building Code
NOA-No. 24-0912.04
Expiration Date: 12/19/2029
By: Manuel Perez
Miami-Dade Product Control

PRODUCT REVISED
as complying with the Florida Building Code
NOA-No. 23-0821.06
Expiration Date 12/19/2024
By
Miami-Dade Product Control

JERRY TRAVIS MILLER- ENGINEER
FLORIDA LICENSE #89925
FLORIDA STATE CERTIFICATE
OF AUTHORITY #RY34386

JERRY TRAVIS MILLER
No 89925
STATE OF
FLORIDA
PROFESSIONAL ENGINEER
11/6/23

MAT'L	ASTM A36	
DRAWN	BFS	5/22/13
DESIGNER	BFS	SHEET 14 OF 14

DO NOT SCALE DRAWING
TOLERANCES UNLESS OTHERWISE NOTED

DECIMAL	FRACTIONAL
.XX=±.063"	≤12"=±1/16"
.XXX=±.010"	>12" THRU 96"=±1/8"
.XXXX=±.001"	>96" THRU 144"=±1/4"
	>144"=±3/8"
ANGULAR ±2°	(NC)=NO INSPECTION REQ'D

LOREN COOK CO.
MANUFACTURERS OF AIR MOVING EQUIPMENT
SPRINGFIELD, MISSOURI

CP ISOLATION RAILS
CPV/CPS/CPF
HURRICANE RATED

SIZE	DRAWING NO.	REV.
B	SD130522–18	D

MIAMI-DADE COUNTY
PRODUCT CONTROL SECTION
11805 SW 26 Street, Room 208
Miami, Florida 33175-2474
T (786) 315-2590 F (786) 315-2599
www.miamidade.gov/building

DEPARTMENT OF REGULATORY AND ECONOMIC RESOURCES (RER)
BOARD AND CODE ADMINISTRATION DIVISION

NOTICE OF ACCEPTANCE (NOA)

Loren Cook Company
2015 E. Dale Street
Springfield, MO 65803

SCOPE: This NOA is being issued under the applicable rules and regulations governing the use of construction materials. The documentation submitted has been reviewed and accepted by Miami-Dade County RER-Product Control Section to be used in Miami Dade County and other areas where allowed by the Authority Having Jurisdiction (AHJ).

This NOA shall not be valid after the expiration date stated below. The Miami-Dade County Product Control Section (In Miami Dade County) and/or the AHJ (in areas other than Miami Dade County) reserve the right to have this product or material tested for quality assurance purposes. If this product or material fails to perform in the accepted manner, the manufacturer will incur the expense of such testing and the AHJ may immediately revoke, modify, or suspend the use of such product or material within their jurisdiction. RER reserves the right to revoke this acceptance if it is determined by Miami-Dade County Product Control Section that this product or material fails to meet the requirements of the applicable building code.

This product is approved as described herein and has been designed to comply with the Florida Building Code, including the High Velocity Hurricane Zone.

DESCRIPTION: Model GR Steel and Aluminum Rooftop Gravity Vent

APPROVAL DOCUMENT: Drawing No. **SD080717-14**, titled "GR Gravity Ventilator Hurricane Rated Aluminum and Steel", sheet 1 through 6 of 6, dated 09/03/13, with revision **B** dated 11/06/23, prepared by manufacturer, signed and sealed by Jerry Travis Miller, P.E. bearing the Miami-Dade County Product Control Revision stamp with the Notice of Acceptance number and expiration date by the Miami-Dade County Product Control Section.

MISSILE IMPACT RATING: Large and Small Missile Impact Resistant

LABELING: Each unit shall bear a permanent label with the manufacturer's name or logo, manufacturing address, model number, the positive and negative design pressure rating, indicate impact rated if applicable, installation instruction drawing reference number, approval number (NOA), the applicable test standards, and the statement reading 'Miami-Dade County Product Control Approved' is to be located on the door's side track, bottom angle, or inner surface of a panel.

RENEWAL of this NOA shall be considered after a renewal application has been filed and there has been no change in the applicable building code negatively affecting the performance of this product.

TERMINATION of this NOA will occur after the expiration date or if there has been a revision or change in the materials, use, and/or manufacture of the product or process. Misuse of this NOA as an endorsement of any product, for sales, advertising or any other purposes shall automatically terminate this NOA. Failure to comply with any section of this NOA shall be cause for termination and removal of NOA.

ADVERTISEMENT: The NOA number preceded by the words Miami-Dade County, Florida, and followed by the expiration date may be displayed in advertising literature. If any portion of the NOA is displayed, then it shall be done in its entirety.

INSPECTION: A copy of this entire NOA shall be provided to the user by the manufacturer or its distributors and shall be available for inspection at the job site at the request of the Building Official.

This NOA **revises and renews NOA No. 23-0821.03** and consists of this page 1 and evidence pages E-1, E-2 and E-3, as well as approval document mentioned above.

The submitted documentation was reviewed by **Manuel Perez, P.E.**

MIAMI-DADE COUNTY APPROVED

10/03/24

NOA No. 24-0912.02
Expiration Date: November 13, 2029
Approval Date: October 10, 2024

Loren Cook Company.

NOTICE OF ACCEPTANCE: EVIDENCE SUBMITTED

1. EVIDENCE SUBMITTED UNDER PREVIOUS NOA's

A. DRAWINGS

1. Manufacturer's die drawings and sections.
   (Submitted under NOA No. 08-0908.17)
2. Drawing No. **SD080717-14**, titled "GR Gravity Ventilator Hurricane Rated Aluminum and Steel", sheets 1 through 6 of 6, dated 09/03/13, with revision **B** dated 11/06/23, prepared by manufacturer, signed and sealed by Jerry Travis Miller, P.E.
   (Submitted under NOA No. 23-0821.03)

B. TESTS

1. Test reports on: 1) Uniform Static Air Pressure Test, Loading per FBC TAS 202-94
   2) Large Missile Impact Test per FBC, TAS 201-94
   3) Cyclic Wind Pressure Loading per FBC, TAS 203-94
   along with marked-up drawings and installation diagram of Series/Model 36" x 36" GR, galvanized steel roof vent, prepared by Architectural Testing, Inc., Test Report No. **79144.01-801-18**, dated 03/03/08, signed and sealed by Jeffrey T. Kaminski, P.E.
   (Submitted under NOA No. 08-0908.17)
2. Test reports on: 1) Uniform Static Air Pressure Test, Loading per FBC TAS 202-94
   2) Large Missile Impact Test per FBC, TAS 201-94
   3) Cyclic Wind Pressure Loading per FBC, TAS 203-94
   along with marked-up drawings and installation diagram of Series/Model 36" x 36" GR, aluminum roof vent, prepared by Architectural Testing, Inc., Test Report No. **79144.02-801-18**, dated 06/19/08, signed and sealed by Jeffrey T. Kaminski, P.E.
   (Submitted under NOA No. 08-0908.17)

C. CALCULATIONS

1. Wind loads and anchor capacity calculations dated 09/13/123, prepared by manufacturer, signed and sealed by Bradley F. Skidmore, P.E.
   (Submitted under NOA No. 13-0708.09)

D. QUALITY ASSURANCE

1. Miami-Dade Department of Regulatory and Economic Resources (RER)

E. MATERIAL CERTIFICATIONS

1. None.

Manuel Perez

Manuel Perez, P.E.
Product Control Examiner
NOA No. 24-0912.02
Expiration Date: November 13, 2029
Approval Date: October 10, 2024

Loren Cook Company.

NOTICE OF ACCEPTANCE: EVIDENCE SUBMITTED

1. EVIDENCE SUBMITTED UNDER PREVIOUS NOA's (CONTINUED)

F. STATEMENTS

1. Statement letter of conformance, complying with **FBC 8th Edition (2023)** dated 07/28/23, issued by manufacturer, signed and sealed by Jerry T. Miller, P.E.
   (Submitted under NOA No. 23-0821.03)
2. Testing contract notification dated 11/17/23, issued by Intertek, signed by Cassandra Matthews.
   (Submitted under NOA No. 23-0821.03)
3. Statement letter of no financial interest dated 09/13/13, issued by manufacturer, signed and sealed by Bradley F. Skidmore, P.E.
   (Submitted under NOA No. 13-0708.09)

G. OTHERS

1. Notice of Acceptance No. **21-0405.07**, issued to Loren Cook Company for their Series GR Steel and Aluminum Rooftop Gravity Vent, approved on 06/24/21 and expiring on 11/13/23.

Manuel Perez

Manuel Perez, P.E.
Product Control Examiner
NOA No. 24-0912.02
Expiration Date: November 13, 2029
Approval Date: October 10, 2024

NOTICE OF ACCEPTANCE: EVIDENCE SUBMITTED

2. NEW EVIDENCE SUBMITTED

A. DRAWINGS

1. None.

B. TESTS

1. Test reports on: 1) Uniform Static Air Pressure Test, Loading per FBC TAS 202-94
   2) Large Missile Impact Test per FBC, TAS 201-94
   3) Cyclic Wind Pressure Loading per FBC, TAS 203-94
   along with marked-up drawings and installation diagram of Series/Model 36" x 36" GR, galvanized steel roof vent, prepared by Intertek, Test Report No. **Q7273.01-801-18 R0**, dated 03/05/24, signed and sealed by Tyler Westerling, P.E.
2. Test reports on: 1) Uniform Static Air Pressure Test, Loading per FBC TAS 202-94
   2) Large Missile Impact Test per FBC, TAS 201-94
   3) Cyclic Wind Pressure Loading per FBC, TAS 203-94
   along with marked-up drawings and installation diagram of Series/Model 36" x 36" GR, aluminum roof vent, prepared by Intertek, Test Report No. **Q7273.02-801-18 R0**, dated 03/05/24, signed and sealed by Tyler Westerling, P.E.

C. CALCULATIONS

1. None.

D. QUALITY ASSURANCE

1. Miami-Dade Department of Regulatory and Economic Resources (RER)

E. MATERIAL CERTIFICATIONS

1. None.

F. STATEMENTS

1. None.

G. OTHERS

1. Notice of Acceptance No. **23-0821.0*3***, issued to Loren Cook Company for their Series GR Steel and Aluminum Rooftop Gravity Vent, approved on 12/28/23 and expiring on 11/13/24.

Manuel Perez

Manuel Perez, P.E.
Product Control Examiner
NOA No. 24-0912.02
Expiration Date: November 13, 2029
Approval Date: October 10, 2024

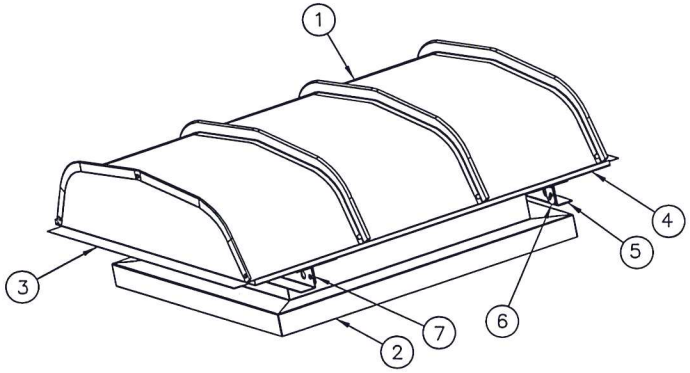

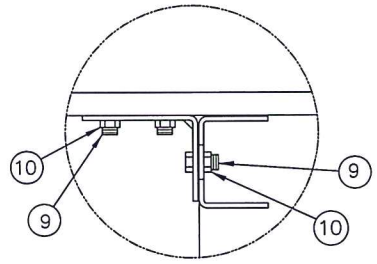

DETAIL A

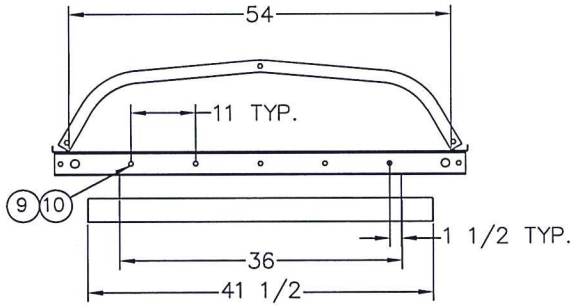

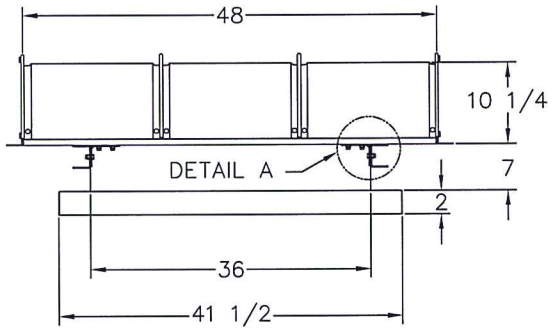

NOTES:

DESIGN PRESSURE:

+/−130PSF – GALVANIZED STEEL CONTRUCTION

+/− 60PSF – ALUMINUM CONSTRUCTION

IMPACT RATING: LARGE MISSILE IMPACT RESISTANT
ALL DIMENSIONS IN INCHES
UNIT SIZE DETERMINED BY INSIDE THROAT DIMENSION
SIZE 36X36 SHOWN
UNIT SIZE NOT TO EXCEED 36X36
UNIT SIZES SMALLER THAN 36X36 ARE ACCEPTABLE
MINIMUM UNIT SIZE IS 12X12

ITEM	QTY	DWG NO.	MATERIAL SPEC.	DESCRIPTION
11	AR	–	1/2 x 1/2 GALV. ST.	BIRDSCREEN MESH–.038 WIRE
10	20	–	5/16–18 STEEL	FLANGE NUT–ZINC COATED
9	20	–	5/16–18 X 3/4 ST,	HWH BOLT–ZINC COATED
8	24	–	1/4 X 3/4 STEEL	HWH SELF–DRILL SCREW
7	2	SHEET6	–	GI/GR MOUNTING BRACKET LEFT
6	2	SHEET6	–	GI/GR MOUNTING BRACKET RIGHT
5	2	SHEET4	–	MOUNTING CHANNEL
4	2	SHEET4	–	SECTION RAIL
3	2	SHEET4	–	HOOD END PANEL
2	1	SHEET5	–	BASE WELDMENT
1	4	SHEET3	–	HOOD PANEL

PRODUCT REVISED
As complying with the Florida Building Code
NOA-No. 24-0912.02
Expiration Date: 11/13/2029
By: Manuel Perez
Miami-Dade Product Control

PRODUCT REVISED
as complying with the Florida Building Code
NOA-No. 23-0821.03
Expiration Date 11/13/2024
By
Miami-Dade Product Control

JERRY TRAVIS MILLER- ENGINEER
FLORIDA LICENSE #89925
FLORIDA STATE CERTIFICATE
OF AUTHORITY #RY34386

JERRY TRAVIS MILLER
No 89925
STATE OF
FLORIDA
PROFESSIONAL ENGINEER
11/6/23

MAT'L	–	
DRAWN	JMD	09/03/13
DESIGNER	BFS	SHEET 1 OF 6

DO NOT SCALE DRAWING
TOLERANCES UNLESS OTHERWISE NOTED

DECIMAL	FRACTIONAL
.XX=±.063"	≤12"=±1/16"
.XXX=±.010"	>12" THRU 96"=±1/8"
.XXXX=±.001"	>96" THRU 144"=±1/4"
ANGULAR ±2°	>144"=±3/8"
	(NC)=NO INSPECTION REQ'D

LOREN COOK CO.
MANUFACTURERS OF AIR MOVING EQUIPMENT
SPRINGFIELD, MISSOURI

GR GRAVITY VENTILATOR
HURRICANE RATED
ALUMINUM AND STEEL

SIZE	DRAWING NO.	REV.
B	SD080717–14	B

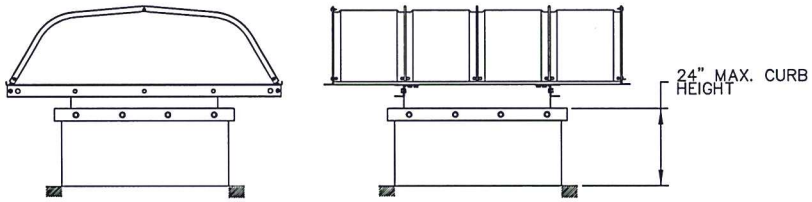

ATTACHMENT OF CURB TO ROOF STRUCTURE

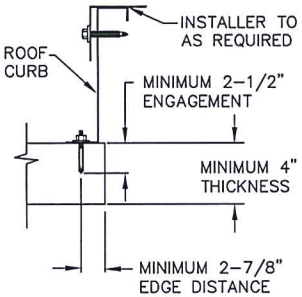

CONCRETE ROOF DECK

MINIMUM 2500PSI CONCRETE

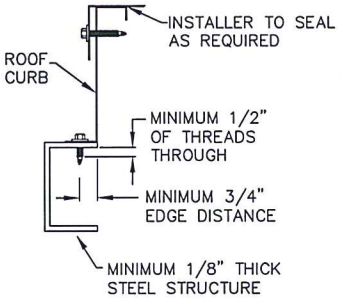

STEEL ROOF STRUCTURE

A36 STEEL STRUCTURE
MINIMUM Fy=36KSI

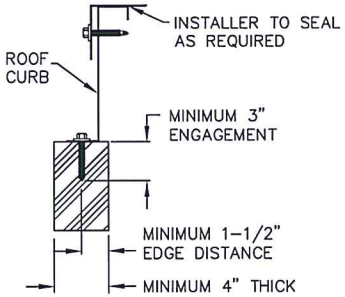

WOOD ROOF STRUCTURE

MIN. 4" NOMINAL THICK WOOD
MIN SG = .42

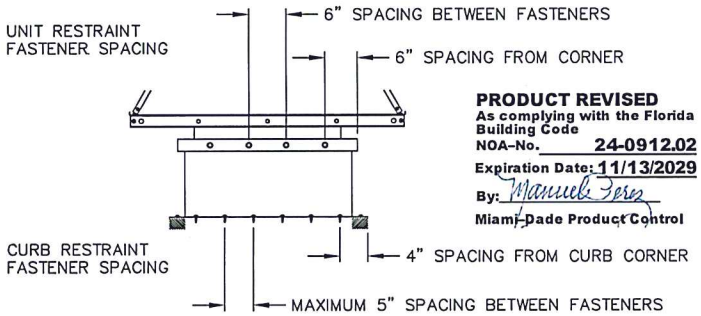

PRODUCT REVISED
As complying with the Florida Building Code
NOA-No. 24-0912.02
Expiration Date: 11/13/2029
By: Manuel Perez
Miami-Dade Product Control

JERRY TRAVIS MILLER- ENGINEER
FLORIDA LICENSE #89925
FLORIDA STATE CERTIFICATE
OF AUTHORITY #RY34386

JERRY TRAVIS MILLER
No 89925
STATE OF FLORIDA
PROFESSIONAL ENGINEER
11/6/23

NOTES:

1) GR GRAVITY VENTILATOR AS REFERRED TO HEREIN REFERS TO ALL LOREN COOK MODEL GR GRAVITY VENTILATORS IN SIZES DEFINED BY THE INSIDE THROAT DIMENSIONS UP TO SIZE 36 X 36. THE EXTERIOR HOUSING AND COMPONENTS MAY BE CONSTRUCTED OF EITHER GALVANIZED STEEL OR ALUMINUM WITH THE PRESSURE RATINGS DEFINED ON SHEET #1.
2) THIS APPROVAL IS FOR THE STRUCTURAL CAPACITY OF THE EXTERIOR HOUSING ONLY, IT DOES NOT INCLUDE ANY INTERIOR MECHANISM OR ELECTRICAL PART.
3) THIS PRODUCT HAS NOT BEEN TESTED FOR WATER PENETRATION ACCORDING TO FLORIDA BUILDING CODE, TAS 100(A), WIND DRIVEN RAIN TEST. IT CANNOT BE INSTALLED WITHIN THE RIDGE AREA (FBC 1523.6.5.2.13)
4) UNIT IS TO INCLUDE A CURB CAP BASE TO FACILITATE MOUNTING OF THE UNIT TO A CURB. THE CURB WILL BE ADEQUATELY ATTACHED TO THE BUILDING STRUCTURE TO SUSTAIN ALL FORCES WHICH MAY BE PRODUCED BY THE PRESCRIBED ENVIROMENTAL FORCES EXERTED ON THE FAN AND CURB. THE CURB MUST BE ATTACHED TO A STRUCTURAL MEMBER OF THE BUILDING.

   CONCRETE DECK: CURB IS TO BE ATTACHED WITH WEDGE TYPE CONCRETE ANCHOR – MINIMUM 3/8" DIAMETER CARBON STEEL – HILTI KWIK BOLT 3 OR EQUAL. MINIMUM 2-1/2" OF ENGAGEMENT IN 2000 PSI MINIMUM CONCRETE. MINIMUM DECK THICKNESS IS 4". ANCHORS ARE TO BE INSTALLED 4" FROM EACH CORNER AND SPACED 5" THEREAFTER.

   STEEL ROOF STRUCTURE: CURB IS TO BE ATTACHED WITH SELF-DRILLING STEEL SCREWS OF MINIMUM NOMINAL SIZE OF 1/4" DIAMETER AND SCREWS SHALL PASS THROUGH STEEL AT LEAST 1/2". THE SCREWS SHALL BE INSTALLED 4" FROM EACH CORNER AND 5" THEREAFTER.

   WOOD ROOF STRUCTURE: CURB IS TO BE ATTACHED WITH STEEL LAG BOLTS NOMINAL SIZE OF 3/8" DIAMETER. WOOD IS TO BE 4" NOMINAL SIZE OR GREATER. THE BOLTS SHALL HAVE A MINIMUM OF 3" OF THREAD ENGAGEMENT. BOLTS SHALL BE INSTALLED 4" FROM EACH CORNER AND 5" THEREAFTER.

5) THE CURB SHALL BE CONSTRUCTED OF 3003H-14 ALUMINUM OR G-90 GALVANIZED STEEL OR STAINLESS STEEL. THE CURB MATERIAL THICKNESS SHALL BE 18 GA (.0470") OR GREATER. THE CURB HEIGHT SHALL NOT EXCEED 24".
6) THE GR GRAVITY VENTILATOR SHALL BE ATTACHED TO THE CURB WITH ONE OF THE FOLLOWING METHODS INSTALLED ON ALL FOUR SIDES OF THE CURB CAP. THE FASTENERS SHALL BE 6" FROM EACH CORNER OF THE FAN BASE AND SPACED NO GREATER THAN 6" THEREAFTER.
   A) #12 X 2" HEX WASHER HEAD SELF-DRILLING SCREW
   B) ALTERNATE FASTENER – .25" HEX HEAD BOLT AND WASHER WITH COMPANION NUT INSTALLED ON THE INTERIOR OF THE CURB.
7) ALL FASTENERS ARE TO BE HIGH QUALITY CORROSION RESISTANT STEEL OR STAINLESS STEEL.
8) ANY GAP BETWEEN THE CURB AND CURB CAP SHALL BE FILLED BY THE INSTALLING CONTRACTOR WITH A SUITABLE CORROSION RESISTANT MATERIAL THAT ALLOWS THE FASTENERS TO BE INSTALLED WITHOUT CAUSING EXCESSIVE DISTORTION OF THE UNIT FLANGES.
9) THE INSTALLER IS RESPONSIBLE FOR CHECKING THAT ALL FASTENERS ARE PROPERLY INSTALLED AND ALL ACCESS PANELS ARE IN PLACE BEFORE PUTTING THE UNIT INTO SERVICE.
10) ALL FASTENERS AND ACCESS PANELS MUST BE PROPERLY INSTALLED AFTER MAINTENANCE OPERATIONS FOR UNIT TO MAINTAIN CODE COMPLIANCE.

PRODUCT REVISED
as complying with the Florida Building Code
NOA-No. 23-0821.03
Expiration Date 11/13/2024
By
Miami-Dade Product Control

MAT'L	–		
DRAWN	JMD	09/03/13	
DESIGNER	BFS	SHEET 2 OF 6	

DO NOT SCALE DRAWING
TOLERANCES UNLESS OTHERWISE NOTED

DECIMAL	FRACTIONAL
.XX=±.063"	≤12"=±1/16"
.XXX=±.010"	>12" THRU 96"=±1/8"
.XXXX=±.001"	>96" THRU 144"=±1/4"
ANGULAR ±2"	>144"=±3/8"
	(NC)=NO INSPECTION REQ'D

LOREN COOK CO.
MANUFACTURERS OF AIR MOVING EQUIPMENT
SPRINGFIELD, MISSOURI

GR GRAVITY VENTILATOR
HURRICANE RATED
ALUMINUM AND STEEL

SIZE	DRAWING NO.	REV.
B	SD080717-14	B

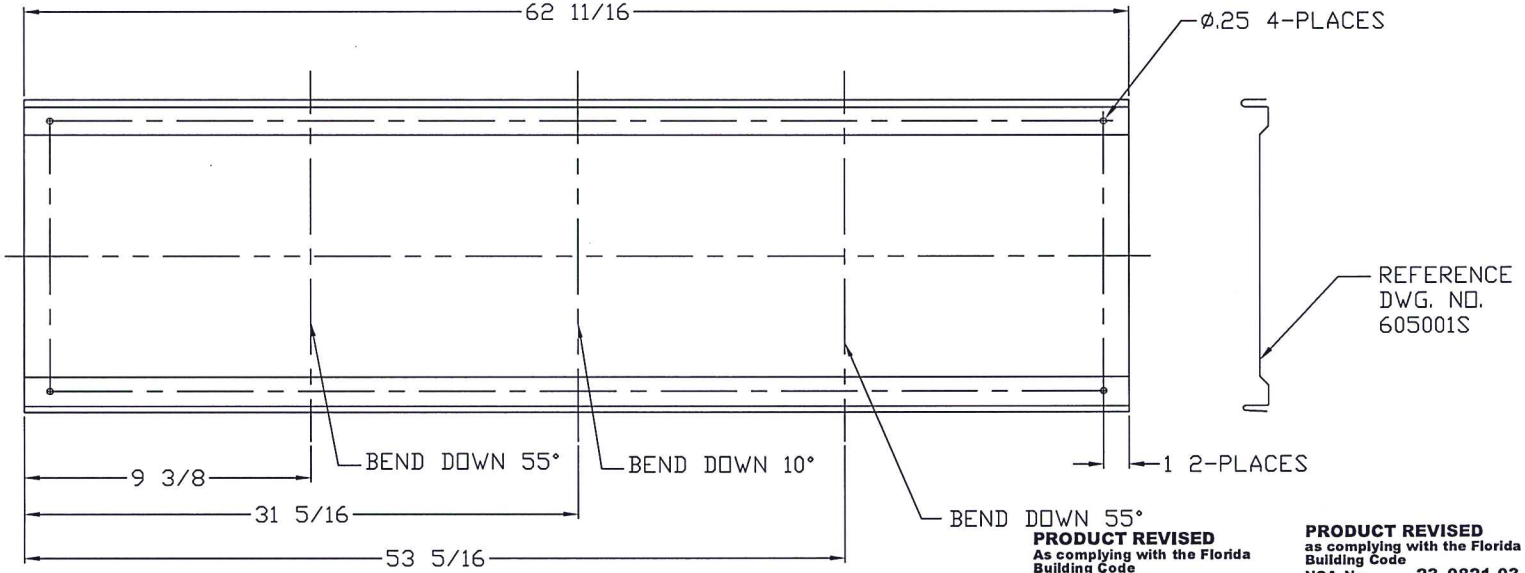

ITEM 1
HOOD PANEL

PRODUCT REVISED
As complying with the Florida Building Code
NOA-No. 24-0912.02
Expiration Date: 11/13/2029
By: Manuel Perez
Miami-Dade Product Control

PRODUCT REVISED
as complying with the Florida Building Code
NOA-No. 23-0821.03
Expiration Date 11/13/2024
By
Miami-Dade Product Control

JERRY TRAVIS MILLER- ENGINEER
FLORIDA LICENSE #89925
FLORIDA STATE CERTIFICATE
OF AUTHORITY #RY34386

JERRY TRAVIS MILLER
No 89925
STATE OF
FLORIDA
PROFESSIONAL ENGINEER
11/6/23

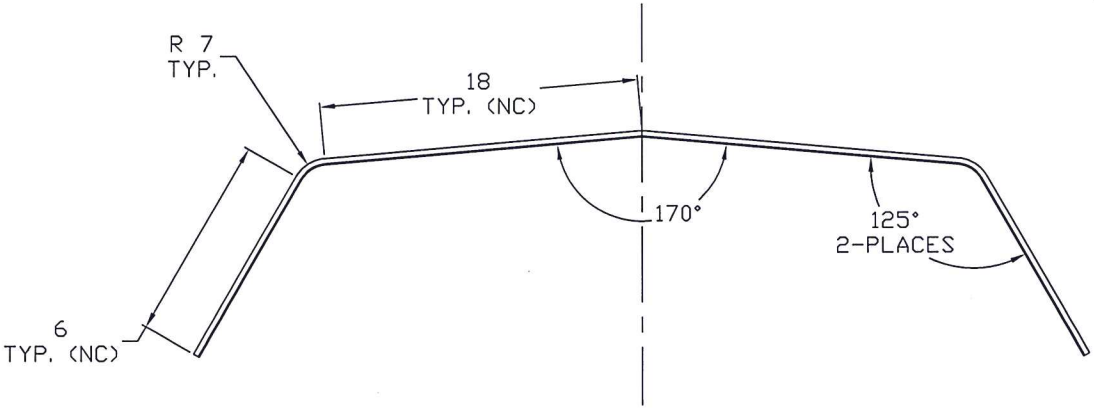

HOOD PANEL SIDE VIEW

NOTES:
4 HOOD PANEL REQUIRED PER UNIT
MATERIAL: 20 GA. G-90 GALVANIZED STEEL
ALTERNATE CONSTRUCTION: .040 3003-H14 ALUMINUM

MAT'L	SEE NOTES	
DRAWN	JMD	09/03/13
DESIGNER	BFS	SHEET 3 OF 6

DO NOT SCALE DRAWING
TOLERANCES UNLESS OTHERWISE NOTED

DECIMAL	FRACTIONAL
.XX=±.063"	≤12"=±1/16"
.XXX=±.010"	>12" THRU 96"=±1/8"
.XXXX=±.001"	>96" THRU 144"=±1/4"
ANGULAR ±2°	>144"=±3/8"

(NC)=NO INSPECTION REQ'D

LOREN COOK CO.
MANUFACTURERS OF AIR MOVING EQUIPMENT
SPRINGFIELD, MISSOURI

GR GRAVITY VENTILATOR
HURRICANE RATED
ALUMINUM AND STEEL

SIZE	DRAWING NO.	REV.
B	SD080717-14	B

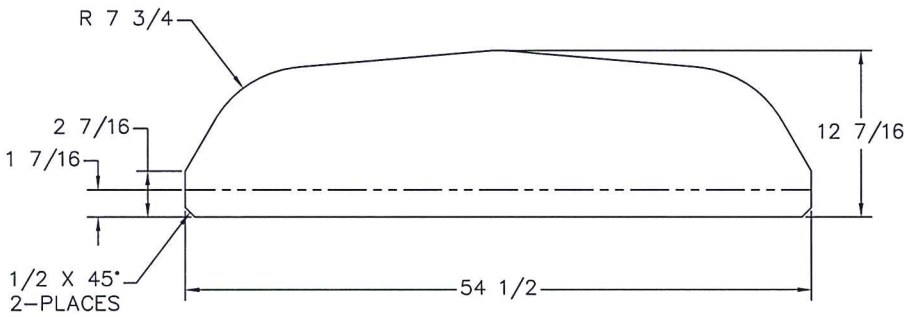

ITEM 1
HOOD END PANEL

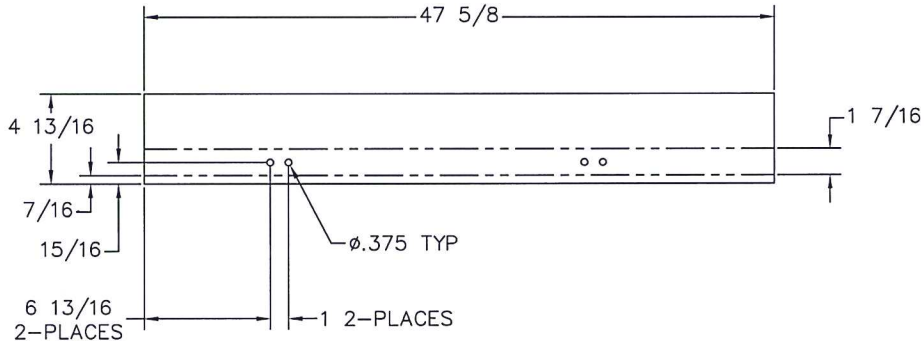

ITEM 2
SECTION RAIL

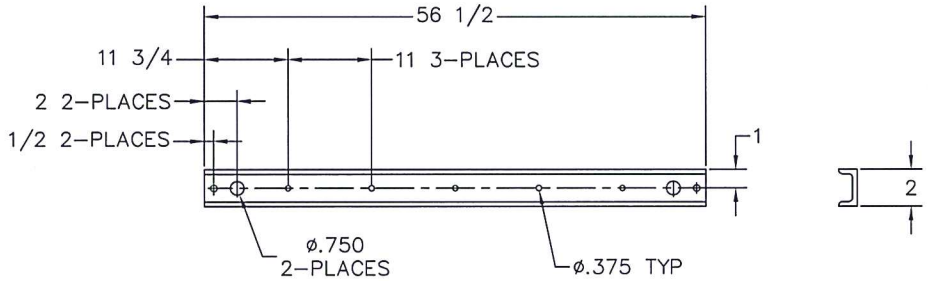

ITEM 3
MOUNTING CHANNEL

PRODUCT REVISED
As complying with the Florida Building Code
NOA-No. 24-0912.02
Expiration Date: 11/13/2029
By: Manuel Perez
Miami-Dade Product Control

PRODUCT REVISED
as complying with the Florida Building Code
NOA-No. 23-0821.03
Expiration Date 11/13/2024
By
Miami-Dade Product Control

JERRY TRAVIS MILLER- ENGINEER
FLORIDA LICENSE #89925
FLORIDA STATE CERTIFICATE
OF AUTHORITY # RY34386

JERRY TRAVIS MILLER
No 89925
STATE OF
FLORIDA
PROFESSIONAL ENGINEER
11/6/23

NOTES:
2 HOOD END PANELS REQUIRED PER UNIT – 18 GA. GALV STEEL/.063 ALUM
2 SECTION RAILS REQUIRED PER UNIT – 16 GA. GALV STEEL/.100 ALUM
2 MOUNTING CHANNELS REQUIRED PER UNIT – 12 GA. GALV STEEL/2 X .130 ALUM
MATERIAL: G-90 GALVANIZED STEEL
ALTERNATE MATERIAL: 3003 H-14 ALUMINUM

MAT'L	SEE NOTES	
DRAWN	JMD	09/03/13
DESIGNER	BFS	SHEET 4 OF 6

DO NOT SCALE DRAWING
TOLERANCES UNLESS OTHERWISE NOTED

DECIMAL	FRACTIONAL
.XX=±.063"	≤12"=±1/16"
.XXX=±.010"	>12" THRU 96"=±1/8"
.XXXX=±.001"	>96" THRU 144"=±1/4"
ANGULAR ±2°	>144"=±3/8"
	(NC)=NO INSPECTION REQ'D

LOREN COOK CO.
MANUFACTURERS OF AIR MOVING EQUIPMENT
SPRINGFIELD, MISSOURI

GR GRAVITY VENTILATOR
HURRICANE RATED
ALUMINUM AND STEEL

SIZE	DRAWING NO.	REV.
B	SD080717-14	B

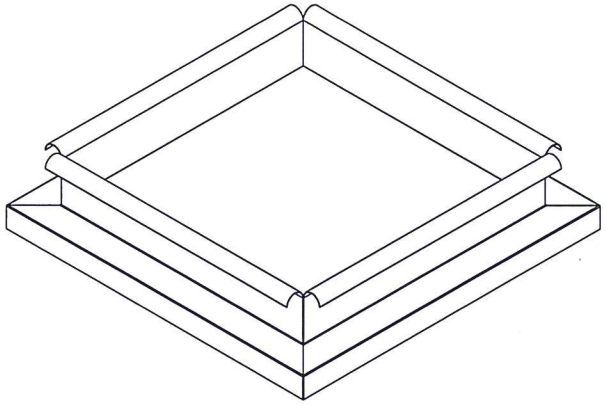

BASE WELDMENT

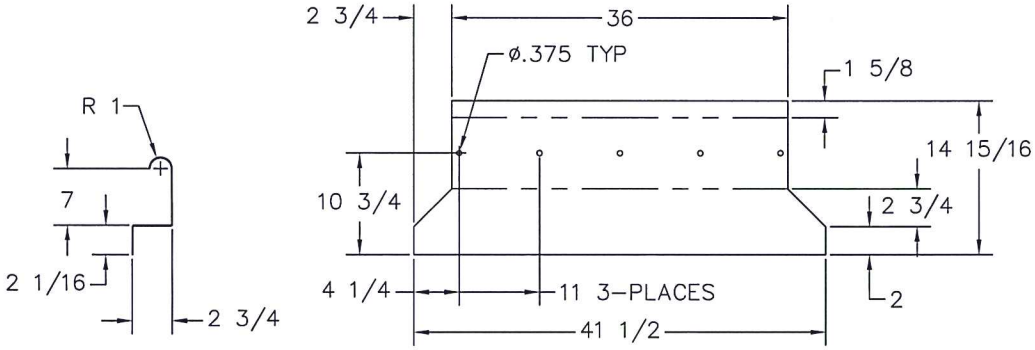

ITEM 1
BASE WIDTH SIDE PANEL
8PUNCH HOLES IN TWO PARTS ONLY

NOTES:
MATERIAL: 16 GA. G-90 GALVANIZE STEEL
ALTERNATE MATERIAL: .080 3003 H-14 ALUMINUM

JERRY TRAVIS MILLER- ENGINEER
FLORIDA LICENSE #89925
FLORIDA STATE CERTIFICATE
OF AUTHORITY #RY34386

JERRY TRAVIS MILLER
No 89925
STATE OF
FLORIDA
PROFESSIONAL ENGINEER
11/6/23

PRODUCT REVISED
As complying with the Florida Building Code
NOA-No. 24-0912.02
Expiration Date: 11/13/2029
By: Manuel Feiro
Miami-Dade Product Control

PRODUCT REVISED
as complying with the Florida Building Code
NOA-No. 23-0821.03
Expiration Date 11/13/2024
By
Miami-Dade Product Control

MAT'L	SEE NOTES	
DRAWN	JMD	09/03/13
DESIGNER	BFS	SHEET 5 OF 6

DO NOT SCALE DRAWING
TOLERANCES UNLESS OTHERWISE NOTED

DECIMAL	FRACTIONAL
.XX=±.063"	≤12"=±1/16"
.XXX=±.010"	>12" THRU 96"=±1/8"
.XXXX=±.001"	>96" THRU 144"=±1/4"
ANGULAR ±2°	>144"=±3/8"
	(NC)=NO INSPECTION REQ'D

LOREN COOK CO.
MANUFACTURERS OF AIR MOVING EQUIPMENT
SPRINGFIELD, MISSOURI

GR GRAVITY VENTILATOR
HURRICANE RATED
ALUMINUM AND STEEL

SIZE	DRAWING NO.	REV.
B	SD080717-14	B

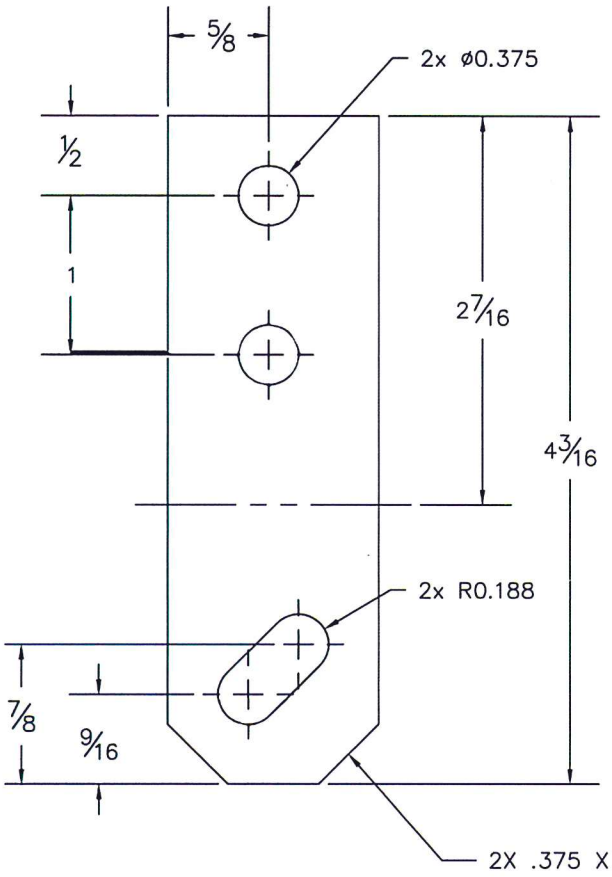

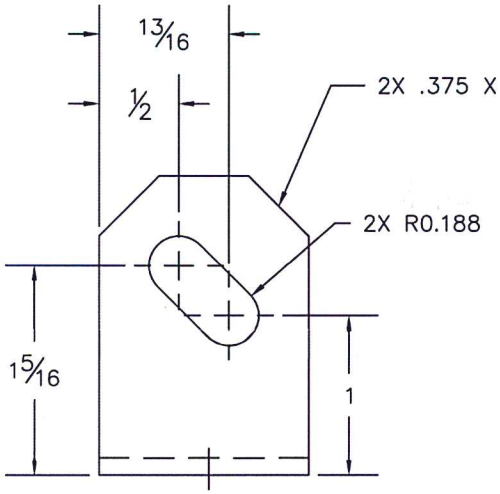

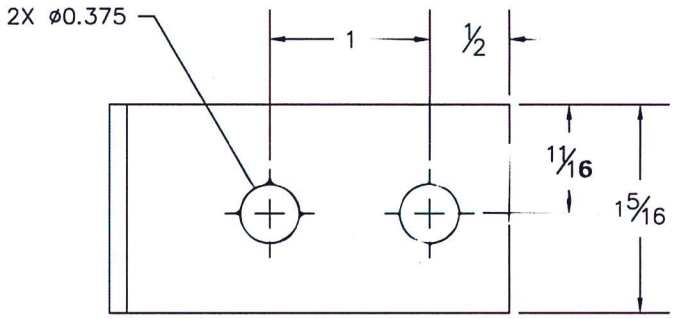

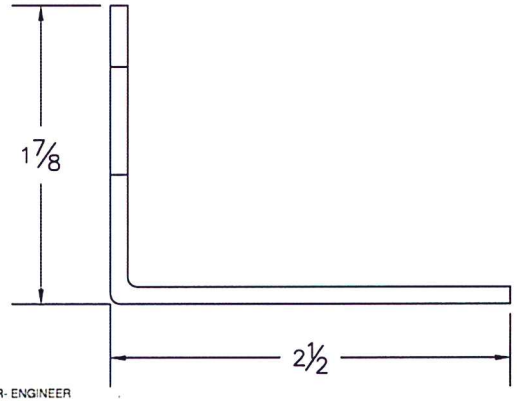

NOTES:
4 MOUNTING BRACKETS REQUIRED PER UNIT.
2 – LEFT BRACKETS FORMED AS SHOWN.
2 – RIGHT BRACKETS FORMED OPPOSITE.

PRODUCT REVISED
As complying with the Florida Building Code
NOA-No. 24-0912.02
Expiration Date: 11/13/2029
By: Manuel Perez
Miami-Dade Product Control

PRODUCT REVISED
as complying with the Florida Building Code
NOA-No. 23-0821.03
Expiration Date 11/13/2024
By
Miami-Dade Product Control

JERRY TRAVIS MILLER- ENGINEER
FLORIDA LICENSE #89925
FLORIDA STATE CERTIFICATE
OF AUTHORITY #RY34386

JERRY TRAVIS MILLER
No 89925
STATE OF
FLORIDA
PROFESSIONAL ENGINEER
11/6/23

MAT'L	12 GA G-90 GALV.	
DRAWN	JMD	09/03/13
DESIGNER	BFS	SHEET 6 OF 6

DO NOT SCALE DRAWING
TOLERANCES UNLESS OTHERWISE NOTED

DECIMAL	FRACTIONAL
.XX=±.063"	≤12"=±1/16"
.XXX=±.010"	>12" THRU 96"=±1/8"
.XXXX=±.001"	>96" THRU 144"=±1/4"
ANGULAR ±2°	>144"=±3/8"
	(NC)=NO INSPECTION REQ'D

LOREN COOK CO.
MANUFACTURERS OF AIR MOVING EQUIPMENT
SPRINGFIELD, MISSOURI

GR GRAVITY VENTILATOR
HURRICANE RATED
ALUMINUM AND STEEL

SIZE	DRAWING NO.	REV.
B	SD080717-14	B

MIAMI-DADE COUNTY
PRODUCT CONTROL SECTION
11805 SW 26 Street, Room 208
Miami, Florida 33175-2474
T (786) 315-2590 F (786) 315-2599
www.miamidade.gov/building

DEPARTMENT OF REGULATORY AND ECONOMIC RESOURCES (RER)
BOARD AND CODE ADMINISTRATION DIVISION

NOTICE OF ACCEPTANCE (NOA)

Loren Cook Company
2015 E. Dale Street
Springfield, MO 65803

SCOPE: This NOA is being issued under the applicable rules and regulations governing the use of construction materials. The documentation submitted has been reviewed and accepted by Miami-Dade County RER-Product Control Section to be used in Miami Dade County and other areas where allowed by the Authority Having Jurisdiction (AHJ).

This NOA shall not be valid after the expiration date stated below. The Miami-Dade County Product Control Section (In Miami Dade County) and/or the AHJ (in areas other than Miami Dade County) reserve the right to have this product or material tested for quality assurance purposes. If this product or material fails to perform in the accepted manner, the manufacturer will incur the expense of such testing and the AHJ may immediately revoke, modify, or suspend the use of such product or material within their jurisdiction. RER reserves the right to revoke this acceptance if it is determined by Miami-Dade County Product Control Section that this product or material fails to meet the requirements of the applicable building code.

This product is approved as described herein and has been designed to comply with the Florida Building Code, including the High Velocity Hurricane Zone.

DESCRIPTION: Models "GI and GR" Steel and Aluminum Rooftop Gravity Vents – N.I.

APPROVAL DOCUMENT: Drawing No. **SD130708-02**, titled "GI/GR Gravity Ventilator Hurricane Rated Steel and Aluminum", sheet 1 through 10 of 10, dated 05/22/2014, prepared by manufacturer, signed and sealed by Jerry T. Miller, P.E. on 02/16/2024, bearing the Miami-Dade County Product Control Renewal stamp with the Notice of Acceptance number and expiration date by the Miami-Dade County Product Control Section.

MISSILE IMPACT RATING: None

LABELING: Each unit shall bear a permanent label with the manufacturer's name or logo, manufacturing address, model number, the positive and negative design pressure rating, indicate impact rated if applicable, installation instruction drawing reference number, approval number (NOA), the applicable test standards, and the statement reading 'Miami-Dade County Product Control Approved' is to be located on the door's side track, bottom angle, or inner surface of a panel.

RENEWAL of this NOA shall be considered after a renewal application has been filed and there has been no change in the applicable building code negatively affecting the performance of this product.

TERMINATION of this NOA will occur after the expiration date or if there has been a revision or change in the materials, use, and/or manufacture of the product or process. Misuse of this NOA as an endorsement of any product, for sales, advertising or any other purposes shall automatically terminate this NOA. Failure to comply with any section of this NOA shall be cause for termination and removal of NOA.

ADVERTISEMENT: The NOA number preceded by the words Miami-Dade County, Florida, and followed by the expiration date may be displayed in advertising literature. If any portion of the NOA is displayed, then it shall be done in its entirety.

INSPECTION: A copy of this entire NOA shall be provided to the user by the manufacturer or its distributors and shall be available for inspection at the job site at the request of the Building Official.

This NOA **renews NOA No. 21-0405.11** and consists of this page 1 and evidence page E-1, E-2 and E-3, as well as approval document mentioned above.

The submitted documentation was reviewed by **Carlos M. Utrera, P.E.**

MIAMI-DADE COUNTY APPROVED

04/10/24

NOA No. 24-0311.07
Expiration Date: August 21, 2029
Approval Date: April 18, 2024

Loren Cook Company.

NOTICE OF ACCEPTANCE: EVIDENCE SUBMITTED

1. EVIDENCE SUBMITTED UNDER PREVIOUS NOA's

A. DRAWINGS

1. Manufacturer's die drawings and sections.
   (Submitted under NOA No. 13-1105.01)
2. Drawing No. **SD130708-02**, titled "GI/GR Gravity Ventilator Hurricane Rated Steel and Aluminum", sheets 1 through 10 of 10, dated 05/22/14, with revision D, prepared by manufacturer, signed and sealed by Bradley F. Skidmore, P.E.
   (Submitted under NOA No. 19-0621.02)

B. TESTS

1. Test reports on: 1) Uniform Static Air Pressure Test, Loading per FBC TAS 202-94
   2) Large Missile Impact Test per FBC, TAS 201-94
   along with marked-up drawings and installation diagram of Model ACRU/VCR 300 rooftop ventilator with 48" high roof curb, prepared by Intertek/ATI, Test Report No. **G1591.01-801-18**, dated 09/22/16, signed and sealed by Tyler Westerling, P.E.
   (Submitted under NOA No. 16-1108.05)
2. Test reports on: 1) Uniform Static Air Pressure Test, Loading per FBC TAS 202-94 along with marked-up drawings and installation diagram of Series/Model GI steel and aluminum gravity ventilator, prepared by Architectural Testing, Inc., Test Report No. **C1438.01-801-18**, dated 07/05/13, with revision #2 dated 05/15/14, signed and sealed by Shawn G. Collins, P.E.
   (Submitted under NOA No. 13-1105.01)

C. CALCULATIONS

1. Wind loads and anchor verification calculations dated 06/10/19, prepared by manufacturer, signed and sealed by Bradley F. Skidmore, P.E.
   (Submitted under NOA No. 19-0621.02)

Carlos M. Utrera, P.E.
Product Control Examiner
NOA No. 24-0311.07
Expiration Date: August 21, 2029
Approval Date: April 18, 2024

NOTICE OF ACCEPTANCE: EVIDENCE SUBMITTED

D. QUALITY ASSURANCE

1. Miami-Dade Department of Regulatory and Economic Resources (RER)

E. MATERIAL CERTIFICATIONS

1. None.

F. STATEMENTS

1. Statement letter of conformance, complying with **FBC 6th Edition (2017)** dated 06/11/19, issued by manufacturer, signed and sealed by Bradley F. Skidmore, P.E.
   (Submitted under NOA No. 19-0621.02)
2. Statement letter of no financial interest dated 10/29/13, issued by manufacturer, signed and sealed by Bradley F. Skidmore, P.E.
   (Submitted under NOA No. 13-1105.01

G. OTHERS

1. Notice of Acceptance No. **15-1013.02**, issued to Loren Cook Company for their Model GI and GR Steel and Aluminum Rooftop Gravity Vents, approved on 01/28/16 and expiring on 08/21/19.

Carlos M. Utrera, P.E.
Product Control Examiner
NOA No. 24-0311.07
Expiration Date: August 21, 2029
Approval Date: April 18, 2024

NOTICE OF ACCEPTANCE: EVIDENCE SUBMITTED

2. EVIDENCE SUBMITTED UNDER NOA # 21-0405.11 AND NEW

A. DRAWINGS

1. Drawing No. **SD130708-02**, titled "GI/GR Gravity Ventilator Hurricane Rated Steel and Aluminum", sheet 1 through 10 of 10, dated 05/22/2014, prepared by manufacturer, signed and sealed by Jerry T. Miller, P.E. on 02/16/2024.

B. TESTS

1. None.

C. CALCULATIONS

1. None.

D. QUALITY ASSURANCE

1. Miami-Dade Department of Regulatory and Economic Resources (RER)

E. MATERIAL CERTIFICATIONS

1. None.

F. STATEMENTS

1. Statement letter of conformance, complying with 8th edition (2023) of the FBC, issued by Miller Engineering, dated 02/23/2024, signed and sealed by Jerry T. Miller, P.E.
2. Statement letter of no financial interest, issued by Miller Engineering, dated 02/23/2024, signed and sealed by Jerry T. Miller, P.E.

   "Submitted under NOA # 21-0405.11"

3. Statement letter of code conformance, complying with the 7th edition (2020) of the FBC, issued by manufacturer, dated 03/19/2021, signed and sealed by Bradley F. Skidmore, P.E.

Carlos M. Utrera, P.E.
Product Control Examiner
NOA No. 24-0311.07
Expiration Date: August 21, 2029
Approval Date: April 18, 2024

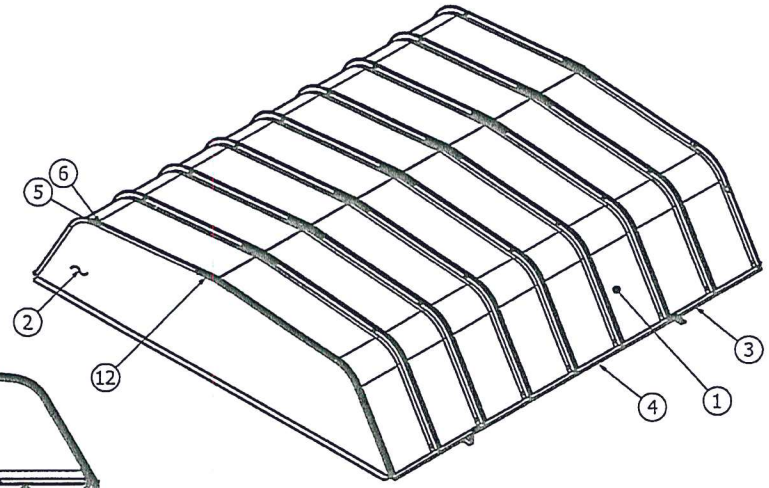

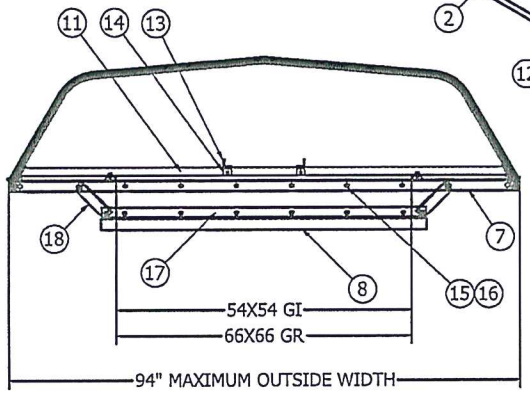

DETAIL A
SCALE 0.14 : 1

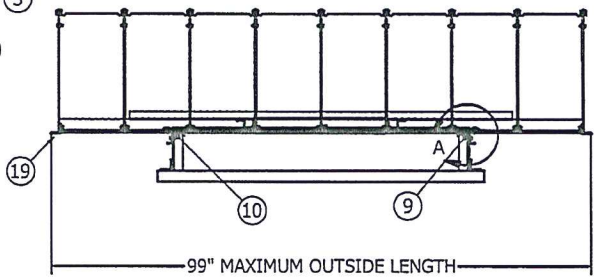

PRODUCT RENEWED
as complying with the Florida Building Code
NOA-No. 24-0311.07

Expiration Date 08/21/2029

By _____
Miami-Dade Product Control

NOTES:
DESIGN PRESSURE: +/- 90 PSF GALVANIZED STEEL CONSTRUCTION
+/- 90 PSF ALUMINUM CONSTRUCTION
ALL DIMENSIONS IN INCHES
DESIGN, TESTING AND ATTACHMENT CONFORMS TO FLORIDA BUILDING CODE
UNIT SIZED DETERMINED BY INSIDE THROAT DIMENSION
MAXIMUM SIZE: GI-54X54 (INTAKE) GR-66X66 (RELIEF)
MAXIMUM OUTSIDE HOOD DIMENSIONS 94X99
MAXIMUM UNIT WEIGHT: 630LBS (GALVANIZED STEEL) / 420LBS (ALUMINUM)

ITEM	QTY	SHEET NUMBER	DESCRIPTION
19	2	SHEET 6	END SUPPORT ANGLE
18	4	SHEET 10	HOOD SUPPORT ANGLE
17	2	SHEET 10	BASE SUPPORT ANGLE
16	22	—	5/16-18 WIZZNUT
15	22	—	5/16-18 x 3/4 WIZZLOCK BOLT
14	4	SHEET 7	BASE OPENING MOUNTING ANGLE (ALUM CONSTRUCTION ONLY)
13	2	SHEET 7	BASE OPENING ANGLE (ALUMINNUM CONSTRUCTION ONLY)
12	18	SHEET 7	STIFFENING BRACKET
11	2	SHEET 7	SUPPORT ANGLE WELDMENT
10	2	SHEET 9	RIGHT MOUNTING BRACKET
9	2	SHEET 9	LEFT MOUNTING BRACKET
8	2	SHEET 8	BASE WELDMENT
7	2	SHEET 7	MOUNTING CHANNEL
6	77	—	1/4-20 WIZZ NUT
5	77	—	1/4-20 X .75 WIZZ BOLT
4	2	SHEET 6	SECTION RAIL SPLICE
3	4	SHEET 6	SECTION RAIL
2	2	SHEET 6	GI/GR END PANEL
1	8	SHEET 5	GI/GR HOOD PANEL

JERRY TRAVIS MILLER- ENGINEER
FLORIDA LICENSE #48625
FLORIDA STATE CERTIFICATE
OF AUTHORITY #8734386
JERRY TRAVIS MILLER
No 48625
STATE OF
FLORIDA
PROFESSIONAL ENGINEER
2/14/24

MAT'L	–	
DRAWN	BFS	05/22/14
DESIGNER	BFS	SHEET 1 OF 10

DO NOT SCALE DRAWING
TOLERANCES UNLESS OTHERWISE NOTED

DECIMAL	FRACTIONAL
.XX=±.063"	≤12"=±1/16"
.XXX=±.010"	>12" THRU 96"=±1/8"
.XXXX=±.001"	>96" THRU 144"=±1/4"
ANGULAR ±2°	>144"=±3/8"
	(NC)=NO INSPECTION REQ'D

LOREN COOK CO.
MANUFACTURERS OF AIR MOVING EQUIPMENT
SPRINGFIELD, MISSOURI

GI/GR GRAVITY VENTILATOR
HURRICANE RATED
STEEL AND ALUMINUM

SIZE	DRAWING NO.	REV.
B	SD130708-02	D

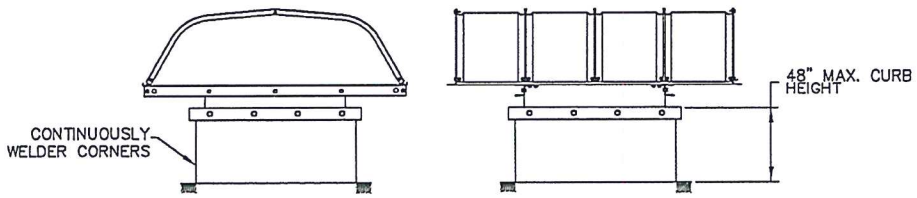

ATTACHMENT OF CURB TO ROOF STRUCTURE

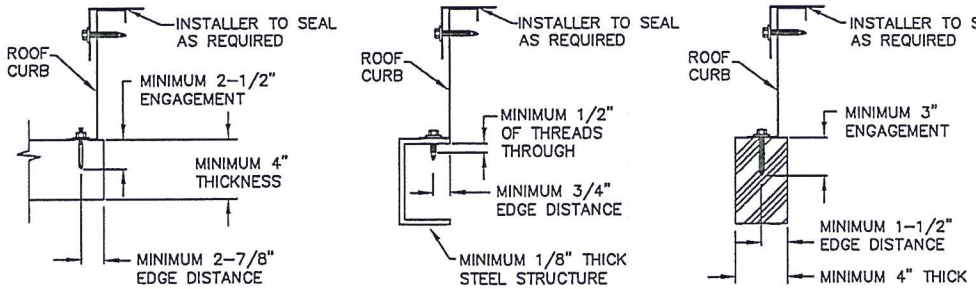

CONCRETE ROOF DECK	STEEL ROOF STRUCTURE	WOOD ROOF STRUCTURE
MINIMUM 2000PSI CONCRETE	A36 STEEL STRUCTURE MINIMUM Fy=36KSI	MIN. 4" NOMINAL THICK WOOD MIN SG = .42

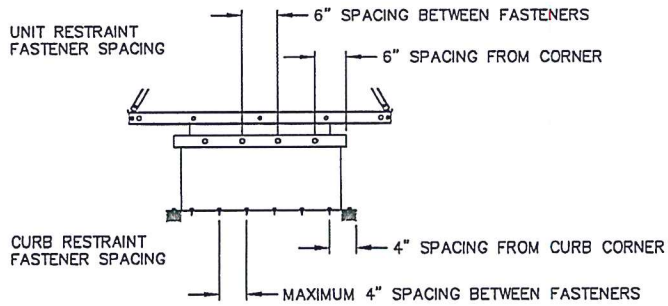

NOTES:

1) THE GI/GR GRAVITY VENTILATOR REFERRED TO HEREIN REFERS TO THE LOREN COOK MODEL GI WHICH IS NORMALLY USED FOR INTAKE VENTILATION AND THE MODEL GR WHICH IS NORMALLY USED FOR RELIEF VENTILATION. THE GI AND GR SIZES ARE DESIGNATED BY THE INSIDE THROAT DIMENSIONS WHICH SHALL NOT EXCEED 54"X54" FOR THE GI AND 66"X66" FOR THE GR AND MAY BE CONSTRUCTED FROM ALUMINUM OR GALVANIZED STEEL. THE OUTSIDE HOOD DIMENSIONS SHALL NOT EXCEED 94"X99".
2) THIS APPROVAL IS FOR THE STRUCTURAL CAPACITY OF THE EXTERIOR HOUSING ONLY, IT DOES NOT INCLUDE ANY INTERIOR MECHANISM OR ELECTRICAL PART.
3) THIS PRODUCT HAS NOT BEEN TESTED FOR IMPACT RESISTANCE.
4) THIS PRODUCT HAS NOT BEEN TESTED FOR WATER PENETRATION ACCORDING TO FLORIDA BUILDING CODE, TAS 100(A), WIND DRIVEN RAIN TEST. IT CANNOT BE INSTALLED WITHIN THE RIDGE AREA (FBC 1523.6.5.2.13)
5) UNIT IS TO INCLUDE A CURB CAP BASE TO FACILITATE MOUNTING OF THE UNIT TO A CURB. THE CURB WILL BE ADEQUATELY ATTACHED TO THE BUILDING STRUCTURE TO SUSTAIN ALL FORCES WHICH MAY BE PRODUCED BY THE PRESCRIBED ENVIROMENTAL FORCES EXERTED ON THE FAN AND CURB. THE CURB MUST BE ATTACHED TO A STRUCTURAL MEMBER OF THE BUILDING.

   CONCRETE DECK: CURB IS TO BE ATTACHED WITH WEDGE TYPE CONCRETE ANCHOR – MINIMUM 3/8" DIAMETER CARBON STEEL – HILTI KWIK BOLT 3 OR EQUAL. MINIMUM 2-1/2" OF ENGAGEMENT IN 2000 PSI MINIMUM CONCRETE. MINIMUM DECK THICKNESS IS 4".

   STEEL ROOF STRUCTURE: CURB IS TO BE ATTACHED WITH SELF-DRILLING STEEL SCREWS OF MINIMUM NOMINAL SIZE OF 1/4" DIAMETER AND SCREWS SHALL PASS THROUGH STEEL AT LEAST 1/2".

   WOOD ROOF STRUCTURE: CURB IS TO BE ATTACHED WITH STEEL LAG BOLTS NOMINAL SIZE OF 3/8" DIAMETER. WOOD IS TO BE 4" NOMINAL SIZE OR GREATER. THE BOLTS SHALL HAVE A MINIMUM OF 3" OF THREAD ENGAGEMENT.

6) THE ROOF CURB SHALL HAVE CONTINUOUSLY WELDED CORNERS AND SHALL BE CONSTRUCTED OF G-90 GALVANIZED STEEL OR 5052H-34 ALUMINUM OR STAINLESS STEEL. THE CURB MATERIAL THICKNESS SHALL BE 18 GA (.0470") OR GREATER AND HAVE MINIMUM 30 KSI YIELD STRENGTH. THE HEIGHT SHALL NOT EXCEED 48".
7) THE GR GRAVITY VENTILATOR SHALL BE ATTACHED TO THE CURB WITH ONE OF THE FOLLOWING METHODS INSTALLED ON ALL FOUR SIDES OF THE CURB CAP. THE FASTENERS SHALL BE 6" FROM EACH CORNER OF THE FAN BASE AND SPACED NO GREATER THAN 6" THEREAFTER.
   A) #12 X 2" HEX WASHER HEAD SELF-DRILLING SCREW
   B) ALTERNATE FASTENER – .25"DIA. HEX HEAD BOLT AND WASHER WITH COMPANION NUT INSTALLED ON THE INTERIOR OF THE CURB.
8) ALL FASTENERS ARE TO BE HIGH QUALITY CORROSION RESISTANT STEEL OR STAINLESS STEEL. ALL ALUMINUM SHALL BE PROTECTED FROM CONTACT WITH DISSIMILAR METALS PER ADM1-2015. BY APPLYING BITUMUINOUS COATING OR RUBBERIZED GASKETS BETWEEN SURFACES WHEN INSTALLING VENTS.
9) ANY GAP BETWEEN THE CURB AND CURB CAP SHALL BE FILLED BY THE INSTALLING CONTRACTOR WITH A SUITABLE CORROSION RESISTANT MATERIAL THAT ALLOWS THE FASTENERS TO BE INSTALLED WITHOUT CAUSING EXCESSIVE DISTORTION OF THE UNIT FLANGES.
10) THE INSTALLER IS RESPONSIBLE FOR CHECKING THAT ALL FASTENERS ARE PROPERLY INSTALLED AND ALL ACCESS PANELS ARE IN PLACE BEFORE PUTTING THE UNIT INTO SERVICE.
11) ALL FASTENERS AND ACCESS PANELS MUST BE PROPERLY INSTALLED AFTER MAINTENANCE OPERATIONS FOR UNIT TO MAINTAIN CODE COMPLIANCE.

PRODUCT RENEWED
as complying with the Florida Building Code
NOA-No. 24-0311.07
Expiration Date 08/21/2029
By
Miami-Dade Product Control

JERRY TRAVIS MILLER, ENGINEER
FLORIDA LICENSE #80925
FLORIDA STATE CERTIFICATE OF AUTHORITY #P7342M
No 80925 STATE OF FLORIDA PROFESSIONAL ENGINEER
2/18/14

MAT'L	–	
DRAWN	BFS	05/22/14
DESIGNER	BFS	SHEET 2 OF 10

DO NOT SCALE DRAWING
TOLERANCES UNLESS OTHERWISE NOTED

DECIMAL	FRACTIONAL
.XX=±.063"	≤12"=±1/16"
.XXX=±.010"	>12" THRU 96"=±1/8"
.XXXX=±.001"	>96" THRU 144"=±1/4"
ANGULAR ±2°	>144"=±3/8"
	(NC)=NO INSPECTION REQ'D

LOREN COOK CO.
MANUFACTURERS OF AIR MOVING EQUIPMENT
SPRINGFIELD, MISSOURI

GI/GR GRAVITY VENTILATOR
HURRICANE RATED
ALUMINUM AND STEEL

SIZE	DRAWING NO.	REV.
B	SD130708-02	D

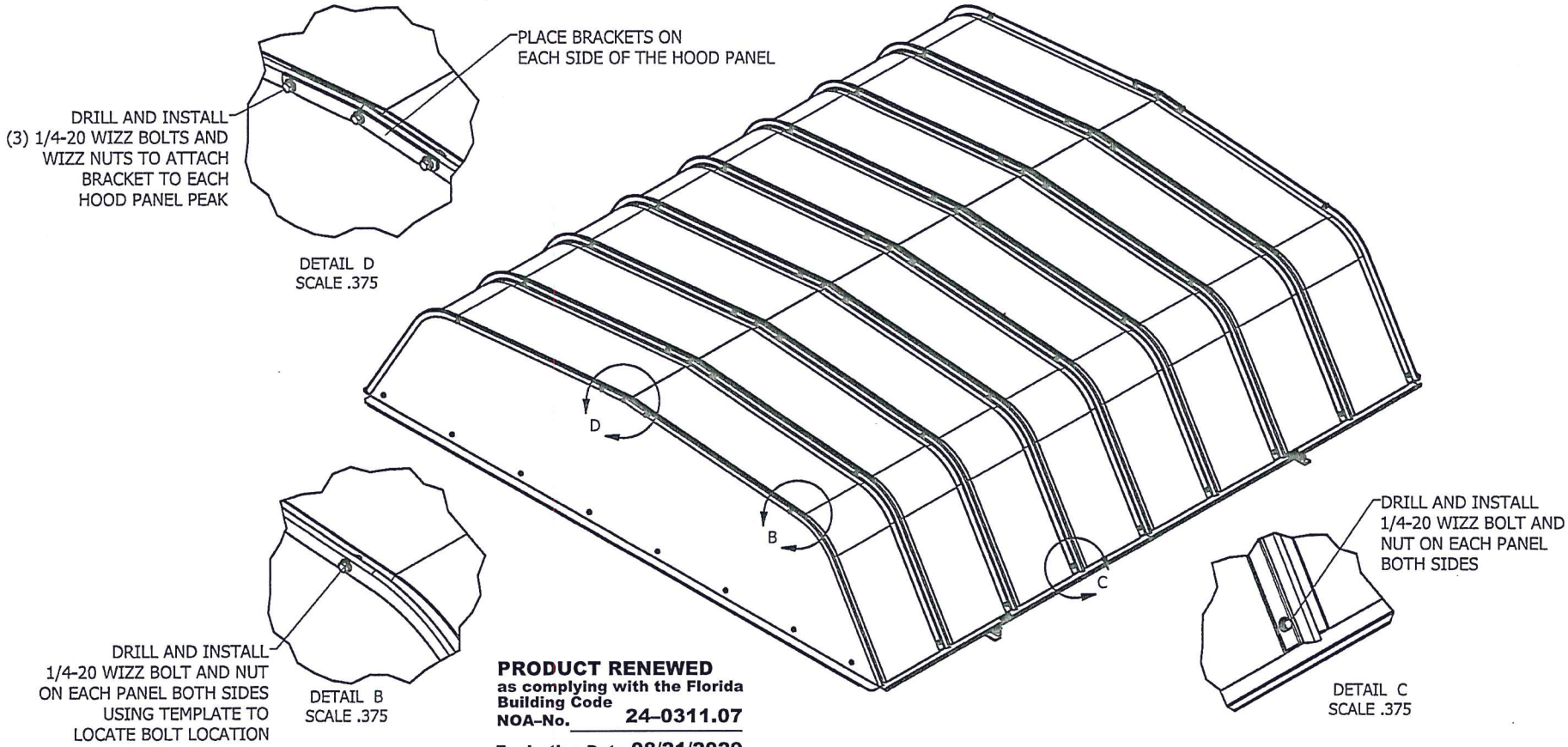

PRODUCT RENEWED
as complying with the Florida Building Code
NOA-No. 24-0311.07
Expiration Date 08/21/2029
By
Miami-Dade Product Control

NOTES:

1. ATTACH BIRDSCREEN TO UNDERSIDE OF SECTION RAIL AND END PANEL

JERRY TRAVIS MILLER- ENGINEER
FLORIDA LICENSE #
FLORIDA STATE CERTIFICATE OF AUTHORITY #

MAT'L	–	
DRAWN	BFS	05/22/14
DESIGNER	BFS	SHEET 3 OF 10

DO NOT SCALE DRAWING
TOLERANCES UNLESS OTHERWISE NOTED

DECIMAL	FRACTIONAL
.XX=±.063"	≤12"=±1/16"
.XXX=±.010"	>12" THRU 96"=±1/8"
.XXXX=±.001"	>96" THRU 144"=±1/4"
ANGULAR ±2°	>144"=±3/8"
	(NC)=NO INSPECTION REQ'D

LOREN COOK CO.
MANUFACTURERS OF AIR MOVING EQUIPMENT
SPRINGFIELD, MISSOURI

GI/GR GRAVITY VENTILATOR
HURRICANE RATED
STEEL AND ALUMINUM

SIZE	DRAWING NO.	REV.
B	SD130708-02	D

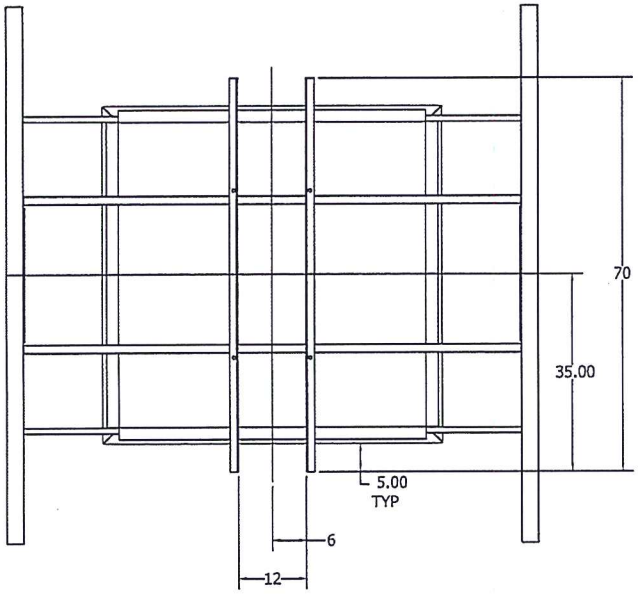

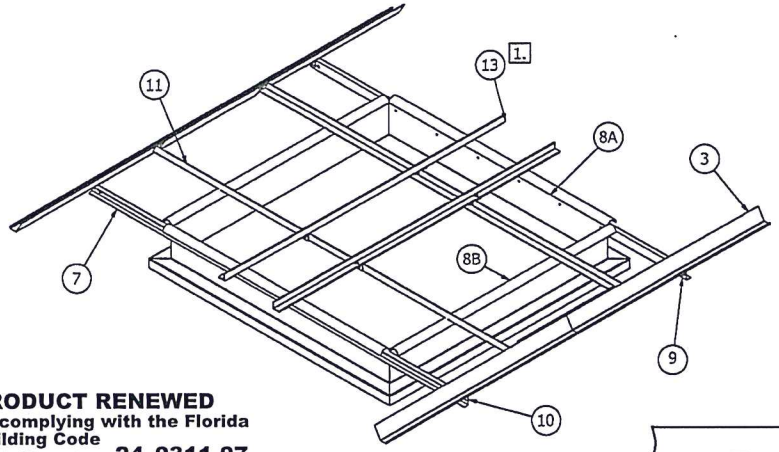

PRODUCT RENEWED
as complying with the Florida Building Code
NOA-No. 24-0311.07
Expiration Date 08/21/2029
By
Miami-Dade Product Control

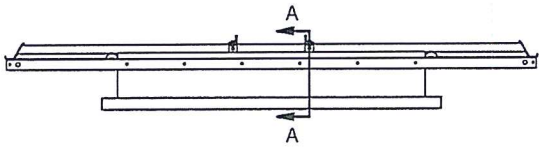

SECTION A-A
SCALE 0.07 : 1

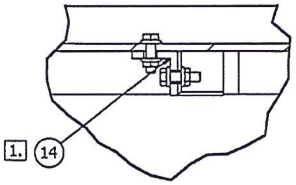

DETAIL E
SCALE 0.375 : 1

NOTES:
1. ITEMS 13 AND 14 FOR ALUMINUM HURRICANE CONSTRUCTION ONLY NOT REQUIRED FOR GALVANIZED HURRICANE CONSTRUCTION

ITEM	QTY	SHEET NO.	DESCRIPTION
14	4	SHEET 7	BASE OPENING MOUNTING ANGLE (REQUIRED ON ALUMINUM UNITS ONLY)
13	2	SHEET 7	BASE OPENING ANGLE (REQUIRED ON ALUMINUM UNITS ONLY)
11	2	SHEET 7	SUPPORT ANGLE WELDMENT
10	2	SHEET 9	RIGHT MOUNTING BRACKET
9	2	SHEET 9	LEFT MOUNTING BRACKET
8	1	SHEET 8	BASE WELDMENT
7	2	SHEET 7	MOUNTING CHANNEL
3	4	SHEET 6	SECTION RAIL

JERRY TRAVIS MILLER, ENGINEER
FLORIDA LICENSE # 89025
FLORIDA STATE CERTIFICATE OF AUTHORITY #P13-4364
JERRY TRAVIS MILLER ENGINEER No 89025 STATE OF FLORIDA PROFESSIONAL ENGINEER
2/16/24

MAT'L	–	
DRAWN	BFS	05/22/14
DESIGNER	BFS	SHEET 4 OF 10

DO NOT SCALE DRAWING
TOLERANCES UNLESS OTHERWISE NOTED

DECIMAL	FRACTIONAL
.XX=±.063"	≤12"=±1/16"
.XXX=±.010"	>12" THRU 96"=±1/8"
.XXXX=±.001"	>96" THRU 144"=±1/4"
ANGULAR ±2°	>144"=±3/8"

(NC)=NO INSPECTION REQ'D

LOREN COOK CO.
MANUFACTURERS OF AIR MOVING EQUIPMENT
SPRINGFIELD, MISSOURI

GI/GR GRAVITY VENTILATOR
HURRICANE RATED
STEEL AND ALUMINUM

SIZE	DRAWING NO.	REV.
B	SD130708-02	D

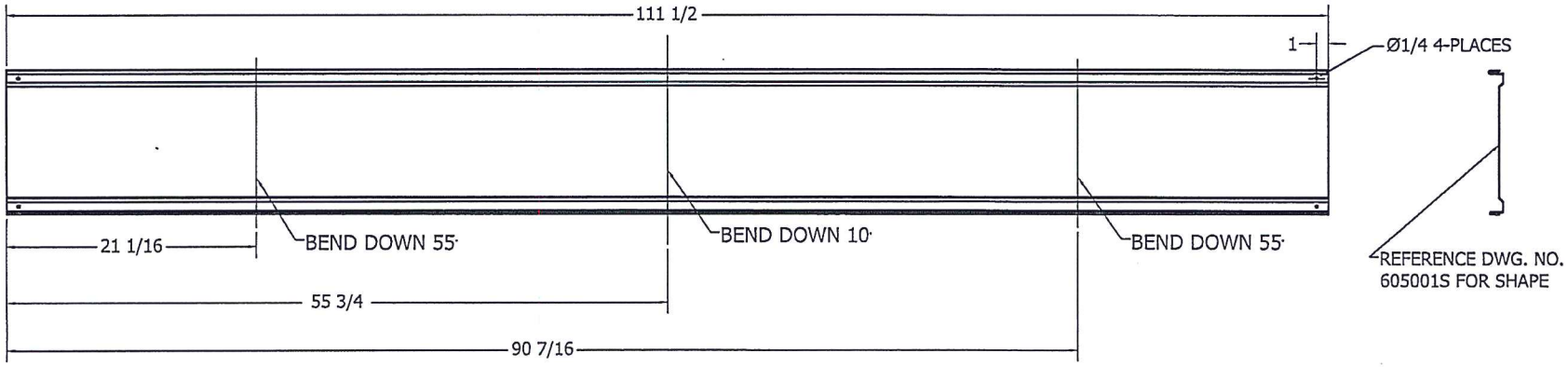

HOOD PANEL

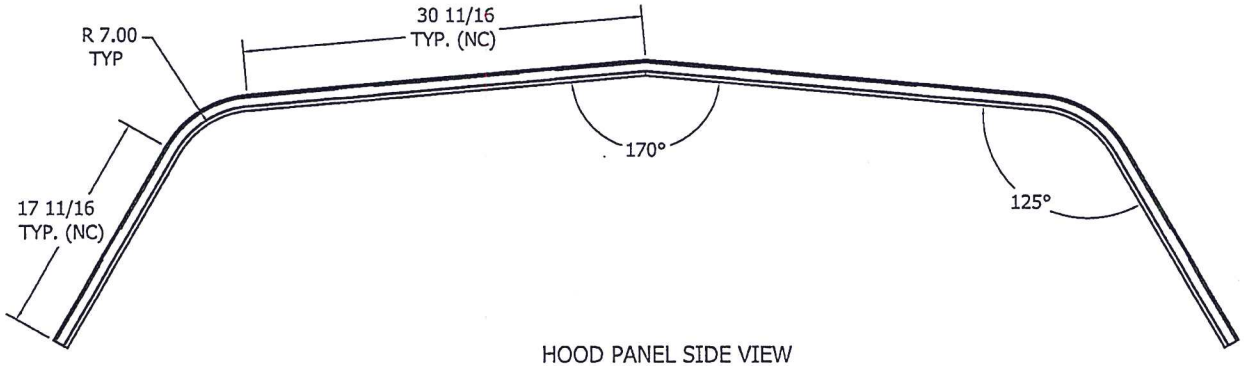

HOOD PANEL SIDE VIEW

PRODUCT RENEWED
as complying with the Florida Building Code
NOA-No. 24-0311.07
Expiration Date 08/21/2029
By
Miami-Dade Product Control

NOTES:
8 HOOD PANELS REQUIRED PER UNIT
MATERIAL: 20 GA G-90 GALVANIZED STEEL: Sy=30 KSI MINIMUM
ALTERNATE CONSTRUCTION: .040 3003 H-14 ALUMINUM: Sy=17 KSI MINIMUM

JERRY TRAVIS MILLER- ENGINEER
FLORIDA LICENSE #86025
FLORIDA STATE CERTIFICATE OF AUTHORITY #P13068

MAT'L	–	
DRAWN	BFS	05/22/14
DESIGNER	BFS	SHEET 5 OF 10

DO NOT SCALE DRAWING
TOLERANCES UNLESS OTHERWISE NOTED

DECIMAL	FRACTIONAL
.XX=±.063"	≤12"=±1/16"
.XXX=±.010"	>12" THRU 96"=±1/8"
.XXXX=±.001"	>96" THRU 144"=±1/4"
ANGULAR ±2°	>144"=±3/8"
	(NC)=NO INSPECTION REQ'D

LOREN COOK CO.
MANUFACTURERS OF AIR MOVING EQUIPMENT
SPRINGFIELD, MISSOURI

GI/GR GRAVITY VENTILATOR
HURRICANE RATED
STEEL AND ALUMINUM

SIZE	DRAWING NO.	REV.
B	SD130708-02	D

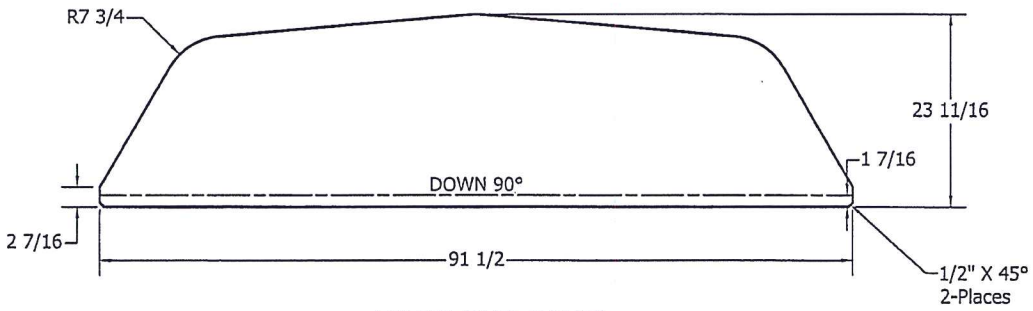

HOOD END PANEL

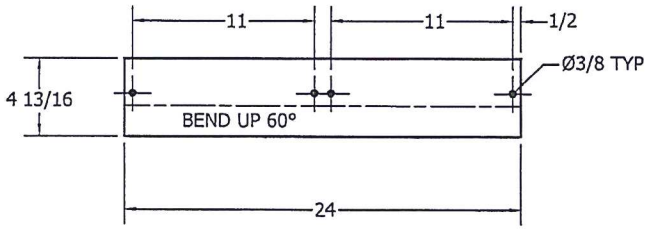

SECTION RAIL SPLICE

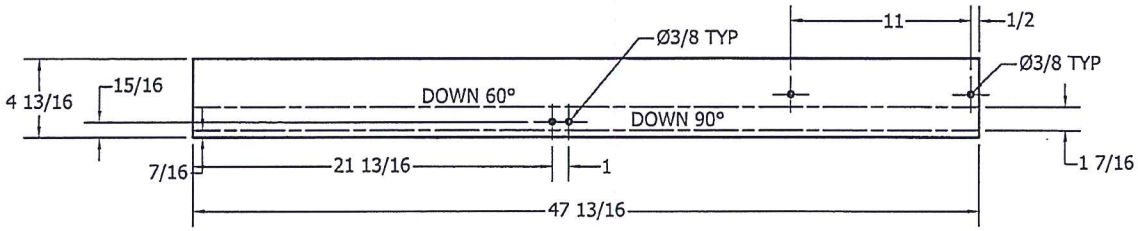

SECTION RAIL

BEND 2 AS SHOWN, BEND 2 OPPOSITE

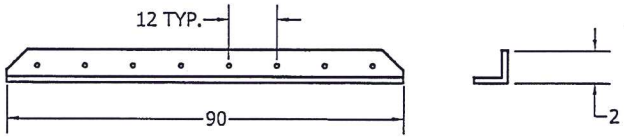

END SUPPORT ANGLE

PRODUCT RENEWED
as complying with the Florida Building Code
NOA-No. 24-0311.07
Expiration Date 08/21/2029
By
Miami-Dade Product Control

NOTES:
1) G90 GALVANIZED STEEL: Sy=30 KSI MINIMUM
2) A36 STEEL: Sy=36 KSI MINIMUM
3) 6005-T5 ALUMINUM: Sy=35 KSI MINIMUM
4) 3003H-14 ALUMINUM SHEET: Sy=17 KSI MINIMUM

ITEM	DESCRIPTION	QTY	MATERIAL
19	END SUPPORT ANGLE (2x2x1/4)	2	A36 STEEL-PAINTED / 6005-T5 ALUMINUM
4	SECTION RAIL SPLICE	2	16 GA G90 GALV STEEL /.100 ALUMINUM(NOTE4)
3	SECTION RAIL	4	16 GA G90 GALV STEEL /.100 ALUMINUM(NOTE4)
2	HOOD END PANEL	2	18 GA G90 GALV STEEL / .063 ALUMINUM(NOTE4)

JERRY TRAVIS MILLER, ENGINEER
FLORIDA LICENSE # 60929
FLORIDA STATE CERTIFICATE OF AUTHORITY #9726-00
NO 69925
STATE OF FLORIDA
PROFESSIONAL ENGINEER

MAT'L	SEE TABLE	
DRAWN	BFS	05/22/14
DESIGNER	BFS	SHEET 6 OF 10

DO NOT SCALE DRAWING
TOLERANCES UNLESS OTHERWISE NOTED

DECIMAL	FRACTIONAL
.XX=±.063"	≤12"=±1/16"
.XXX=±.010"	>12" THRU 96"=±1/8"
.XXXX=±.001"	>96" THRU 144"=±1/4"
ANGULAR ±2°	>144"=±3/8"
	(NC)=NO INSPECTION REQ'D

LOREN COOK CO.
MANUFACTURERS OF AIR MOVING EQUIPMENT
SPRINGFIELD, MISSOURI

GI/GR GRAVITY VENTILATOR
HURRICANE RATED
STEEL AND ALUMINUM

SIZE	DRAWING NO.	REV.
B	SD130708-02	D

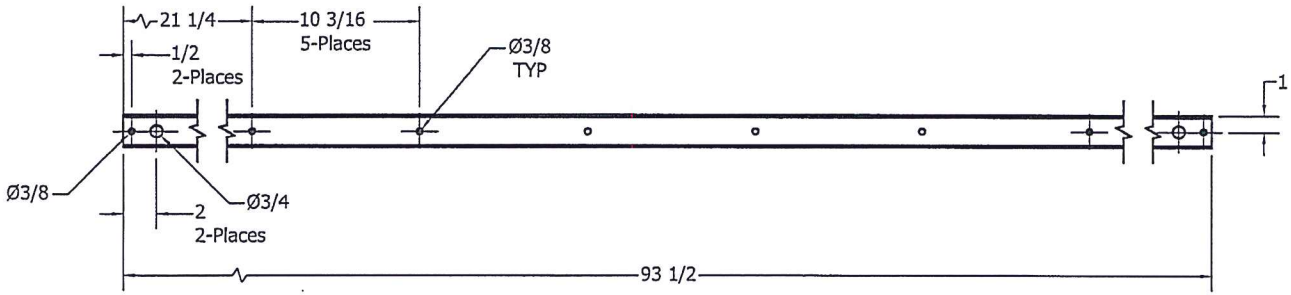

MOUNTING CHANNEL

STIFFENING BRACKET

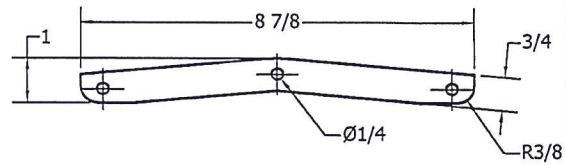

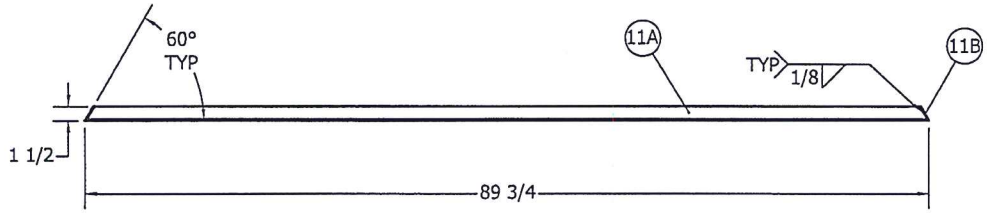

SUPPORT ANGLE WELDMENT

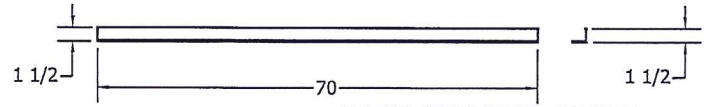

BASE OPENING ANGLE

NOTES:
1) G90 GALVANIZED STEEL: Sy=30KSI MINIMUM
2) A36 STEEL: Sy=36KSI MINIMUM
3) 6005-T5 ALUMINUM: Sy=35KSI MINIMUM
4) 3003H-14 ALUMINUM SHEET: Sy=17KSI MINIMUM

PRODUCT RENEWED
as complying with the Florida Building Code
NOA-No. 24-0311.07
Expiration Date 08/21/2029
By
Miami-Dade Product Control

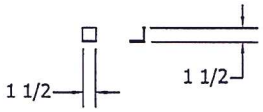

BASE OPENING MOUNTING ANGLE

ITEM	DESCRIPTION	QTY	MATERIAL
14	BASE OPENING MOUNTING ANGLE	4	1-1/2 X 1-1/2 X 1/8 ALUM ANGLE (NOTE3)
13	BASE OPENING ANGLE	2	1-1/2 X 1-1/2 X 1/8 ALUM ANGLE (NOTE3)
12	STIFFENING BRACKET	18	12 GA G-90 GALV. STEEL(NOTE1)
11B	END CAP	4	1 1/2 X 1 3/4 X 12 GA (NOTE1) OR 1 1/2 X 1 3/4 X 1/8" ALUMINUM(NOTE4)
11A	SUPPORT ANGLE	2	1 1/2 X 1 1/2 X 12 GA (NOTE1) OR 1 1/2X1 1/2 X 1/8" ALUMINUM(NOTE3)
11	SUPPORT ANGLE WELDMENT	(2)	(SEE PARTS ABOVE)
7	MOUNTING CHANNEL	2	2 X 1 X 12GA (NOTE1) / 2 X 1 X .130 ALUMINUM (NOTE3)

JERRY TRAVIS MILLER ENGINEER
FLORIDA LICENSE #39625
FLORIDA STATE CERTIFICATE OF AUTHORITY #9725498
JERRY TRAVIS MILLER
No. 39625
STATE OF
FLORIDA
PROFESSIONAL ENGINEER
21/21/24

MAT'L	SEE NOTES	
DRAWN	BFS	05/22/14
DESIGNER	BFS	SHEET 7 OF 10

DO NOT SCALE DRAWING
TOLERANCES UNLESS OTHERWISE NOTED

DECIMAL	FRACTIONAL
.XX=±.063"	≤12"=±1/16"
.XXX=±.010"	>12" THRU 96"=±1/8"
.XXXX=±.001"	>96" THRU 144"=±1/4"
ANGULAR ±2°	>144"=±3/8"
	(NC)=NO INSPECTION REQ'D

LOREN COOK CO.
MANUFACTURERS OF AIR MOVING EQUIPMENT
SPRINGFIELD, MISSOURI

GI/GR GRAVITY VENTILATOR
HURRICANE RATED
STEEL AND ALUMINUM

SIZE	DRAWING NO.	REV.
B	SD130708-02	D

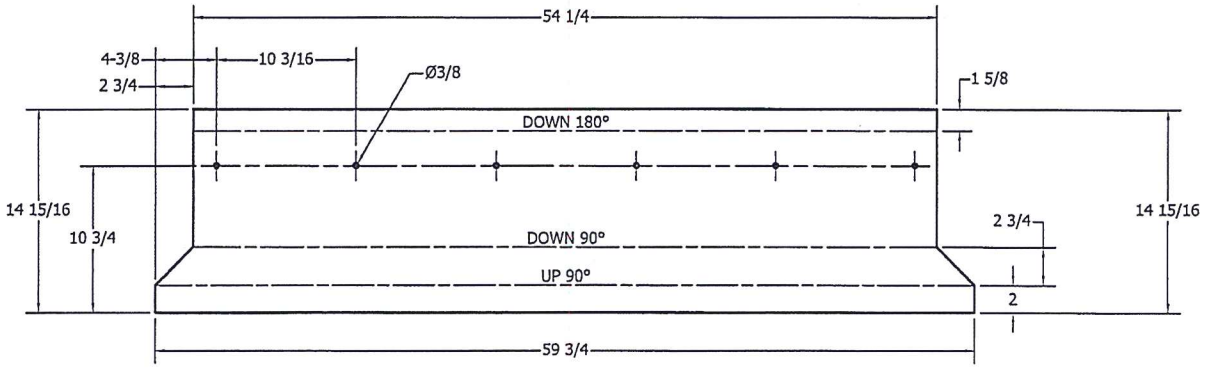

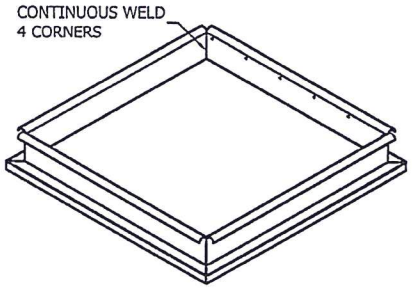

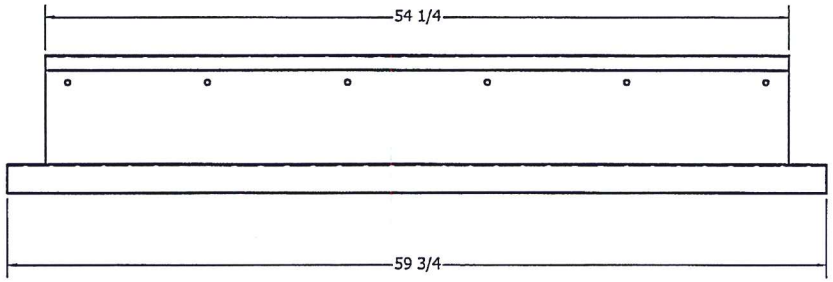

BASE PANEL
*PUNCH HOLES IN TWO PARTS ONLY

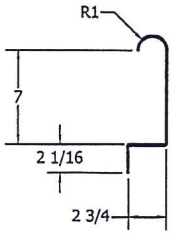

PRODUCT RENEWED
as complying with the Florida Building Code
NOA-No. 24-0311.07
Expiration Date 08/21/2029
By
Miami-Dade Product Control

NOTES:
MATERIAL: 16 GA. G-90 GALANIZED STEEL Sy=30KSI MINIMUM
ALTERNATE MATERIAL: .080 3003 H-14 ALUMINUM Sy=17KSI MINIMUM

ITEM	QTY	DESCRIPTION	MATERIAL
8A	2	BASE PANEL WITH HOLES	SEE NOTES
8B	2	BASE PANEL WITHOUT HOLES	SEE NOTES

JERRY TRAVIS MILLER- ENGINEER
FLORIDA LICENSE #80025
FLORIDA STATE CERTIFICATE OF AUTHORITY #7C4258
JERRY TRAVIS MILLER
No. 80925
STATE OF FLORIDA
PROFESSIONAL ENGINEER
2/14/24

MAT'L	SEE NOTES	
DRAWN	BFS	5/22/14
DESIGNER	BFS	SHEET 8 OF 10

DO NOT SCALE DRAWING
TOLERANCES UNLESS OTHERWISE NOTED

DECIMAL	FRACTIONAL
.XX=±.063"	≤12"=±1/16"
.XXX=±.010"	>12" THRU 96"=±1/8"
.XXXX=±.001"	>96" THRU 144"=±1/4"
ANGULAR ±2°	>144"=±3/8"
	(NC)=NO INSPECTION REQ'D

LOREN COOK CO.
MANUFACTURERS OF AIR MOVING EQUIPMENT
SPRINGFIELD, MISSOURI

GI/GR GRAVITY VENTILATOR
HURRICANE RATED
STEEL AND ALUMINUM

SIZE	DRAWING NO.	REV.
B	SD130708-02	D

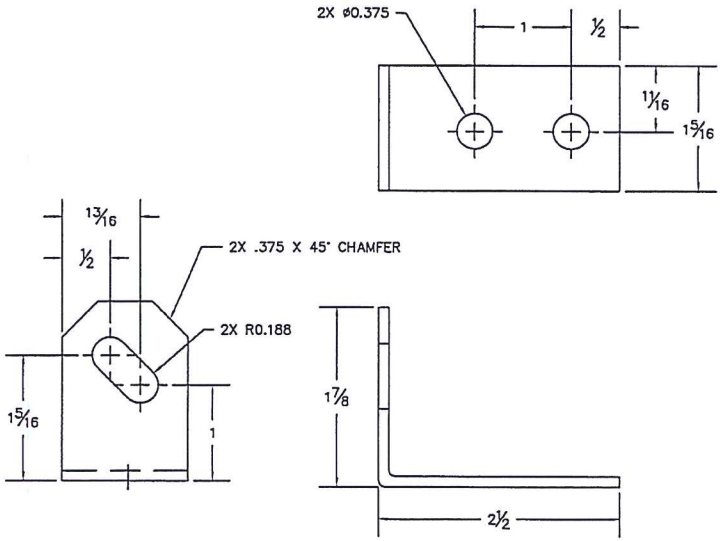

PRODUCT RENEWED
as complying with the Florida Building Code
NOA-No. 24-0311.07
Expiration Date 08/21/2029
By
Miami-Dade Product Control

NOTES:
1) G90 GALVALIZED STEEL: Sy=30KSI MINIMUM

ITEM	QTY	DESCRIPTION	MATERIAL
10	2	RIGHT MOUNTING BRACKET (FORM OPPOSITE)	12GA. G90 GALV. STEEL
9	2	LEFT MOUNTING BRACKET (AS SHOWN)	12GA. G90 GALV. STEEL

JERRY TRAVIS MILLER ENGINEER
FLORIDA LICENSE #89925
FLORIDA STATE CERTIFICATE OF AUTHORITY #7170085
JERRY TRAVIS MILLER
No 89925
STATE OF FLORIDA
PROFESSIONAL ENGINEER
2/12/24

MAT'L	SEE TABLE	
DRAWN	BFS	05/22/14
DESIGNER	BFS	SHEET 9 OF 10

DO NOT SCALE DRAWING
TOLERANCES UNLESS OTHERWISE NOTED

DECIMAL	FRACTIONAL
.XX=±.063"	≤12"=±1/16"
.XXX=±.010"	>12" THRU 96"=±1/8"
.XXXX=±.001"	>96" THRU 144"=±1/4"
ANGULAR ±2°	>144"=±3/8"
	(NC)=NO INSPECTION REQ'D

LOREN COOK CO.
MANUFACTURERS OF AIR MOVING EQUIPMENT
SPRINGFIELD, MISSOURI

GI/GR GRAVITY VENTILATOR
HURRICANE RATED
STEEL AND ALUMINUM

SIZE	DRAWING NO.	REV.
B	SD130708-02	D

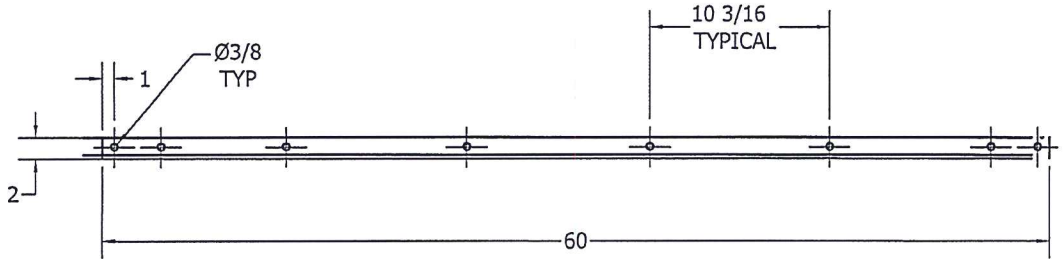

BASE SUPPORT ANGLE

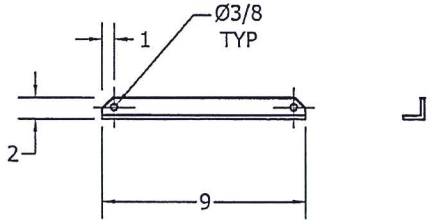

HOOD SUPPORT ANGLE

PRODUCT RENEWED
as complying with the Florida Building Code
NOA-No. 24-0311.07
Expiration Date 08/21/2029
By
Miami-Dade Product Control

NOTES:
1) A36 STEEL: Sy=36KSI MINIMUM
2) 6005-T5 ALUMINUM: Sy=35KSI MINIMUM

ITEM	DESCRIPTION	QTY	MATERIAL
18	HOOD SUPPORT ANGLE	4	2 X 2 X 1/4 A36 (NOTE1) OR 2 X 2 X 1/4 ALUMINUM (NOTE2)
17	BASE SUPPORT ANGLE	2	2 X 2 X 1/4 A36 (NOTE1) OR 2 X 2 X 1/4 ALUMINUM (NOTE2)

JERRY TRAVIS MILLER: ENGINEER
FLORIDA LICENSE #89925
FLORIDA STATE CERTIFICATE OF AUTHORITY #P7D-068
JERRY TRAVIS MILLER
No 89925
STATE OF FLORIDA
PROFESSIONAL ENGINEER
2/14/24

MAT'L	SEE NOTES	
DRAWN	BFS	05/22/14
DESIGNER	BFS	SHEET 10 OF 10

DO NOT SCALE DRAWING
TOLERANCES UNLESS OTHERWISE NOTED

DECIMAL	FRACTIONAL
.XX=±.063"	≤12"=±1/16"
.XXX=±.010"	>12" THRU 96"=±1/8"
.XXXX=±.001"	>96" THRU 144"=±1/4"
ANGULAR ±2°	>144"=±3/8"
	(NC)=NO INSPECTION REQ'D

LOREN COOK CO.
MANUFACTURERS OF AIR MOVING EQUIPMENT
SPRINGFIELD, MISSOURI

GI/GR GRAVITY VENTILATOR
HURRICANE RATED
STEEL AND ALUMINUM

SIZE	DRAWING NO.	REV.
B	SD130708-02	D

MIAMI-DADE COUNTY
PRODUCT CONTROL SECTION
11805 SW 26 Street, Room 208
Miami, Florida 33175-2474
T (786) 315-2590 F (786) 315-2599
www.miamidade.gov/economy

DEPARTMENT OF REGULATORY AND ECONOMIC RESOURCES (RER)
BOARD AND CODE ADMINISTRATION DIVISION

NOTICE OF ACCEPTANCE (NOA)

Loren Cook Company
2015 E. Dale Street
Springfield, MO 65803

SCOPE: This NOA is being issued under the applicable rules and regulations governing the use of construction materials. The documentation submitted has been reviewed and accepted by Miami-Dade County RER-Product Control Section to be used in Miami Dade County and other areas where allowed by the Authority Having Jurisdiction (AHJ).

This NOA shall not be valid after the expiration date stated below. The Miami-Dade County Product Control Section (In Miami Dade County) and/or the AHJ (in areas other than Miami Dade County) reserve the right to have this product or material tested for quality assurance purposes. If this product or material fails to perform in the accepted manner, the manufacturer will incur the expense of such testing and the AHJ may immediately revoke, modify, or suspend the use of such product or material within their jurisdiction. RER reserves the right to revoke this acceptance if it is determined by Miami-Dade County Product Control Section that this product or material fails to meet the requirements of the applicable building code.

This product is approved as described herein and has been designed to comply with the Florida Building Code, including the High Velocity Hurricane Zone.

DESCRIPTION: H Series Steel and Aluminum Rooftop Fans

APPROVAL DOCUMENT: Drawing No. **SD140501-75**, titled "H Series Propeller Fan Roof Mounted Hurricane Rated", sheets 1 through 8 of 8, dated 08/15/2015, prepared by Loren Cook Company, signed and sealed by Jerry T. Miller, P.E. on 02/16/2024, bearing the Miami-Dade County Product Control revision stamp with the Notice of Acceptance number and approval date by the Miami-Dade County Product Control Section.

MISSILE IMPACT RATING: Large and Small Missile Impact Resistant

LABELING: Each unit shall bear a permanent label with the manufacturer's name or logo, city, state, model/series, and following statement: "Miami-Dade County Product Control Approved", unless otherwise noted herein.

RENEWAL of this NOA shall be considered after a renewal application has been filed and there has been no change in the applicable building code negatively affecting the performance of this product.

TERMINATION of this NOA will occur after the expiration date or if there has been a revision or change in the materials, use, and/or manufacture of the product or process. Misuse of this NOA as an endorsement of any product, for sales, advertising or any other purposes shall automatically terminate this NOA. Failure to comply with any section of this NOA shall be cause for termination and removal of NOA.

ADVERTISEMENT: The NOA number preceded by the words Miami-Dade County, Florida, and followed by the expiration date may be displayed in advertising literature. If any portion of the NOA is displayed, then it shall be done in its entirety.

INSPECTION: A copy of this entire NOA shall be provided to the user by the manufacturer or its distributors and shall be available for inspection at the job site at the request of the Building Official.

This NOA **revises NOA # 21-0325.04** and consists of this page 1 and evidence pages E-1 and E-2, as well as approval document mentioned above.

The submitted documentation was reviewed by **Carlos M. Utrera, P.E.**

MIAMI-DADE COUNTY APPROVED

04/10/24

NOA No. 24-0311.09
Expiration Date: May 12, 2026
Approval Date: April 18, 2024

NOTICE OF ACCEPTANCE: EVIDENCE SUBMITTED

1. Evidence submitted under NOA # 15-1005.04

A. DRAWINGS

1. Drawing No. **SD140501-75**, titled "H Series Propeller Fan Roof Mounted Hurricane Rated", sheets 1 through 8 of 8, dated 08/15/2015, prepared by Loren Cook Company, signed and sealed by Bradley F. Skidmore, P.E. on 02/11/2016.

B. TESTS

1. Test reports on 1) Uniform Static Air Pressure Test, Loading per FBC TAS 202-94
   2) Large Missile Impact Test per FBC, TAS 201-94
   along with marked-up drawings and installation diagram of H-Series Rooftop Ventilators, prepared by Intertek/Architectural Testing, Inc., Test Report No. **E0341.01-801-18**, dated 07/10/2015, with a revision dated 02/08/2016, signed and sealed by Tyler Westerling, P.E.

C. CALCULATIONS

1. Wind Loads and anchor calculations prepared by Loren Cook Company, dated 08/15/2015, signed and sealed by Bradley F. Skidmore, P.E.

D. QUALITY ASSURANCE

1. Miami-Dade Department of Regulatory and Economic Resources (RER).

E. MATERIAL CERTIFICATIONS

1. None.

F. STATEMENTS

1. Statement letter of code conformance to the 7th edition (2020) of the FBC issued by Loren Cook Company, dated 03/19/2021, signed and sealed by Bradley F. Skidmore, P.E.
   "New Evidence Submitted"
2. Statement letter of code conformance to the 5th edition (2014) FBC issued by Loren Cook Company, dated 09/15/2015, signed and sealed by Bradley F. Skidmore, P.E.
3. Statement letter of no financial interest issued by Loren Cook Company, dated 09/15/2015, signed and sealed by Bradley F. Skidmore, P.E.

Carlos M. Utrera, P.E.
Product Control Examiner
NOA No. 24-0311.09
Expiration Date: May 12, 2026
Approval Date: April 18, 2024

NOTICE OF ACCEPTANCE: EVIDENCE SUBMITTED

2. NEW EVIDENCE SUBMITTED

A. DRAWINGS

1. Drawing No. **SD140501-75**, titled "H Series Propeller Fan Roof Mounted Hurricane Rated", sheets 1 through 8 of 8, dated 08/15/2015, prepared by Loren Cook Company, signed and sealed by Jerry T. Miller, P.E. on 02/16/2024.

B. TESTS

1. None.

C. CALCULATIONS

1. None.

D. QUALITY ASSURANCE

1. Miami-Dade Department of Regulatory and Economic Resources (RER)

E. MATERIAL CERTIFICATIONS

1. None.

F. STATEMENTS

1. Statement letter of conformance, complying with 8th edition (2023) of the FBC, issued by Miller Engineering, dated 02/23/2024, signed and sealed by Jerry T. Miller, P.E.
2. Statement letter of no financial interest, issued by Miller Engineering, dated 02/23/2024, signed and sealed by Jerry T. Miller, P.E.

Carlos M. Utrera, P.E.
Product Control Examiner
NOA No. 24-0311.09
Expiration Date: May 12, 2026
Approval Date: April 18, 2024

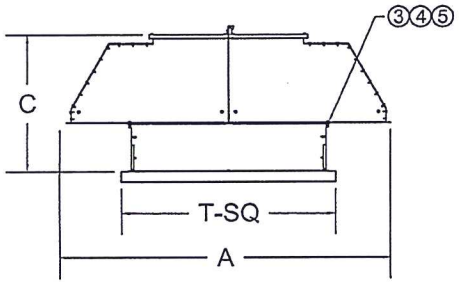

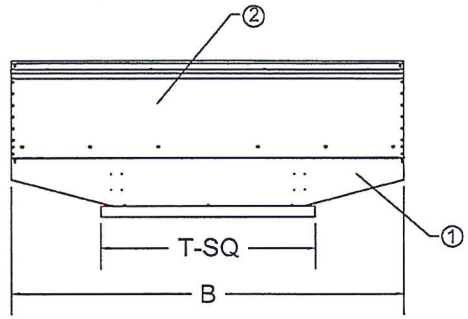

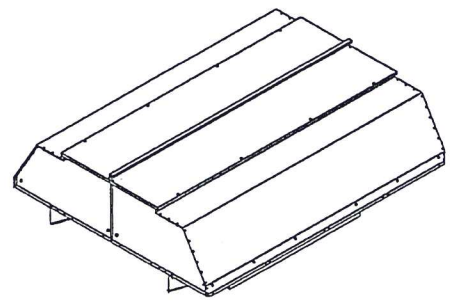

UNFILTERED UNIT SIZE	FILTERED UNIT SIZE	A DIM	B DIM	C DIM	T SQ	MAX. UNIT WEIGHT
48		90	110	41 1/2	60	1265
	42	90	110	41 1/2	54	1235
42		90	90	38		1155
	36	90	90	38	48	975
36		80	80	33		915
	30	80	80	33	42	710
30		69	69	30 1/2		660
	24	69	69	30 1/2	36	610
24		59	59	28 3/4		565
	20	59	59	28 3/4	32	520
20	-	52	52	27 1/4		470

BELT DRIVE MODELS HEE,HES,HXEL,HXEM HXSL,HXSM,HER
DIRECT DRIVE MODELS HEE-D,HES-D, HER-D

BELT DRIVE MODELS HEF, HXFL, HXFM
DIRECT DRIVE MODELS HEF-D

NOTES:
DESIGN PRESSURE: +/- 130PSF GALVANIZED STEEL HOOD
+/- 70PSF ALUMINUM HOOD
ALL DIMENSIONS IN INCHES.
DESIGN, TESTING AND ATTACHMENT CONFORMS TO FLORIDA BUILDING CODE.
MINIMUM SY=30KSI SHEET STEEL
MINIMUM SY=17KSI SHEET ALUMINUM

ITEM	DESCRIPTION	SHEET	QUANTITY
5	3/8 USS WASHER (1 OD)	–	4
4	3/8 NYLOC LOCKNUT	–	4
3	3/8 X 1 HEX BOLT	–	4
2	HOOD ASSEMBLY	8	1
1	BASE ASSEMBLY	4	1

PRODUCT REVISED
as complying with the Florida Building Code
NOA-No. 24-0311.09
Expiration Date 05/12/2026
By
Miami-Dade Product Control

JERRY TRAVIS MILLER- ENGINEER
FLORIDA LICENSE # 69925
FLORIDA STATE CERTIFICATE OF AUTHORITY #4734308
JERRY TRAVIS MILLER
No 69925
STATE OF FLORIDA
PROFESSIONAL ENGINEER
2/12/24

MAT'L	–	
DRAWN	BFS	08/15/15
DESIGNER	BFS	SHEET 1 OF 8

DO NOT SCALE DRAWING
TOLERANCES UNLESS OTHERWISE NOTED

DECIMAL	FRACTIONAL
.XX=±.063"	≤12"=±1/16"
.XXX=±.010"	>12" THRU 96"=±1/8"
.XXXX=±.001"	>96" THRU 144"=±1/4"
	>144"=±3/8"
ANGULAR ±2°	(NC)=NO INSPECTION REQ'D

LOREN COOK CO.
MANUFACTURERS OF AIR MOVING EQUIPMENT
SPRINGFIELD, MISSOURI

HSERIES PROPELLER FAN
ROOF MOUNTED
HURRICANE RATED

SIZE	DRAWING NO.	REV.
B	SD140501-75	B

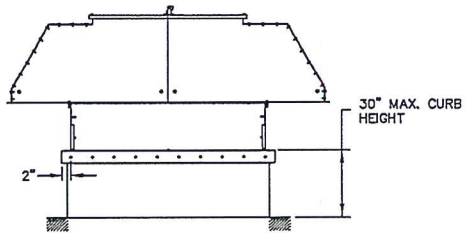

ATTACHMENT OF CURB TO ROOF STRUCTURE

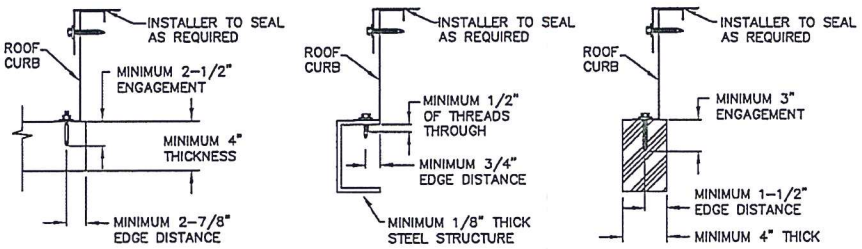

CONCRETE ROOF DECK	STEEL ROOF STRUCTURE	WOOD ROOF STRUCTURE
MINIMUM 2500PSI CONCRETE	A36 STEEL STRUCTURE MINIMUM Fy=36KSI	MIN. 4" NOMINAL THICK WOOD MIN SG = .42

FASTENER TABLE		
UNIT SIZE	MINIMUM NUMBER OF FASTENERS PER SIDE TO ATTACH UNIT TO CURB	MINIMUM NUMBER OF FASTENERS PER SIDE TO ATTACH CURB TO ROOF STRUCTURE
20	5	5
24	6	6
30	7	7
36	8	9
42	9	10
48	10	10

NOTES:

1) H-SERIES PROP FAN AS REFERRED TO HEREIN REFERS TO ALL LOREN COOK MODEL ROOF MOUNT POWER VENTILATORS INCLUDING BOTH DIRECT DRIVE AND BELT DRIVE TYPE UNITS WHICH ARE CONSTRUCTED WITH THE SAME OUTER HOUSING COMPONENTS. THE FULL RANGE OF MODELS WOULD BE:
   HEE, HSE, HEF
   HXEL, HXEM, HXSL, HXSM, HXFL, HXFM
   HER

2) THIS APPROVAL IS FOR THE STRUCTURAL CAPACITY OF THE EXTERIOR HOUSING ONLY, IT DOES NOT INCLUDE ANY INTERIOR MECHANISM OR ELECTRICAL PART.

3) THIS PRODUCT HAS NOT BEEN TESTED FOR WATER PENETRATION ACCORDING TO FLORIDA BUILDING CODE TAS 100(A) WIND DRIVEN RAIN TEST. IT CANNOT BE INSTALLED WITHIN THE RIDGE AREA FBC 1523.6.5.2.13

4) UNIT IS TO INCLUDE A CURB CAP BASE TO FACILITATE MOUNTING OF THE UNIT TO A CURB. THE CURB WILL BE ADEQUATELY ATTACHED TO THE BUILDING STRUCTURE TO SUSTAIN ALL FORCES WHICH MAY BE PRODUCED BY THE PRESCRIBED ENVIROMENTAL FORCES EXERTED ON THE FAN AND CURB. THE CURB MUST BE ATTACHED TO A STRUCTURAL MEMBER OF THE BUILDING.

   CONCRETE DECK: CURB IS TO BE ATTACHED WITH WEDGE TYPE CONCRETE ANCHOR – MINIMUM 3/8" DIAMETER CARBON STEEL – HILTI KWIK BOLT 3 OR EQUAL. MINIMUM 2-1/2" OF ENGAGEMENT IN 2000 PSI MINIMUM CONCRETE. MINIMUM DECK THICKNESS IS 4". SEE TABLE FOR MINIMUM QUANTITY OF ANCHORS REQUIRED PER CURB SIDE.

   STEEL ROOF STRUCTURE: CURB IS TO BE ATTACHED WITH SELF-DRILLING STEEL SCREW OF MINIMUM NOMINAL SIZE OF #12. THE SCREW SHALL PASS THROUGH STEEL STRUCTURE AT LEAST 1/2". SEE TABLE FOR MINIMUM QUANTITY OF SCREWS REQUIRED PER CURB SIDE.

   WOOD ROOF STRUCTURE: CURB IS TO BE ATTACHED WITH STEEL LAG BOLTS NOMINAL SIZE OF 5/16" DIAMETER OR LARGER. WOOD IS TO BE 4" NOMINAL SIZE OR GREATER. THE BOLT SHALL HAVE A MINIMUM OF 3" OF THREAD ENGAGEMENT AND SHALL BE AT LEAST 1-1/2" FROM MATERIAL EDGE. SEE TABLE FOR MINIMUM QUANTITY OF BOLTS REQUIRED PER CURB SIDE.

5) THE CURB SHALL BE CONSTRUCTED OF 5052 ALUMINUM OR G-90 GALVANIZED STEEL OR 300 SERIES STAINLESS STEEL. THE GALVANIZED STEEL CURB MATERIAL THICKNESS SHALL BE 18 GA (0.052") OR GREATER WITH WELDED CORNERS. THE CURB HEIGHT SHALL NOT EXCEED 30".

6) THE H-SERIES PROP POWER VENTILATOR SHALL BE ATTACHED TO THE CURB WITH ONE OF THE FOLLOWING METHODS INSTALLED ON ALL FOUR SIDES OF THE CURB CAP. THE FASTENERS SHALL BE 2" FROM EACH CORNER OF THE FAN BASE. THE DISTANCE BETWEEN FASTENERS SHALL BE 5-1/2" OR LESS. THE QUANTITY OF FASTENERS INTO EACH CURB SIDED SHALL EQUAL OR EXCEED THE QUANTITY SHOWN IN THE FASTENER TABLE (AT LEFT).
   A) #12 X 2" HEX WASHER HEAD SELF-DRILLING SCREW
   B) ALTERNATE FASTENER – .25" HEX HEAD BOLT AND WASHER WITH COMPANION NUT INSTALLED ON THE INTERIOR OF THE CURB.

7) ALL FASTENERS ARE TO BE HIGH QUALITY CORROSION RESISTANT STEEL OR STAINLESS STEEL.

8) ANY GAP BETWEEN THE CURB AND CURB CAP SHALL BE FILLED BY THE INSTALLING CONTRACTOR WITH A SUITABLE CORROSION RESISTANT MATERIAL THAT ALLOWS THE FASTENERS TO BE INSTALLED WITHOUT CAUSING EXCESSIVE DISTORTION OF THE UNIT FLANGES.

9) THE INSTALLER IS RESPONSIBLE FOR CHECKING THAT ALL FASTENERS ARE PROPERLY INSTALLED AND ALL ACCESS PANELS ARE IN PLACE BEFORE PUTTING THE UNIT INTO SERVICE.

10) ALL FASTENERS AND ACCESS PANELS MUST BE PROPERLY INSTALLED AFTER MAINTENANCE OPERATIONS FOR UNIT TO MAINTAIN CODE COMPLIANCE.

PRODUCT REVISED
as complying with the Florida Building Code
NOA-No. 24-0311.09
Expiration Date 05/12/2026
By
Miami-Dade Product Control

JERRY TRAVIS MILLER-ENGINEER
FLORIDA LICENSE #
FLORIDA STATE CERTIFICATE OF AUTHORITY #

MAT'L	–	
DRAWN	BFS	08/15/15
DESIGNER	BFS	SHEET 2 OF 8

DO NOT SCALE DRAWING
TOLERANCES UNLESS OTHERWISE NOTED

DECIMAL	FRACTIONAL
.XX=±.063"	≤12"=±1/16"
.XXX=±.010"	>12" THRU 96"=±1/8"
.XXXX=±.001"	>96" THRU 144"=±1/4"
ANGULAR ±2°	>144"=±3/8"
	(NC)=NO INSPECTION REQ'D

LOREN COOK CO.
MANUFACTURERS OF AIR MOVING EQUIPMENT
SPRINGFIELD, MISSOURI

HSERIES PROPELLER FAN
ROOF MOUNTED
HURRICANE RATED

SIZE	DRAWING NO.	REV.
B	SD140501-75	B

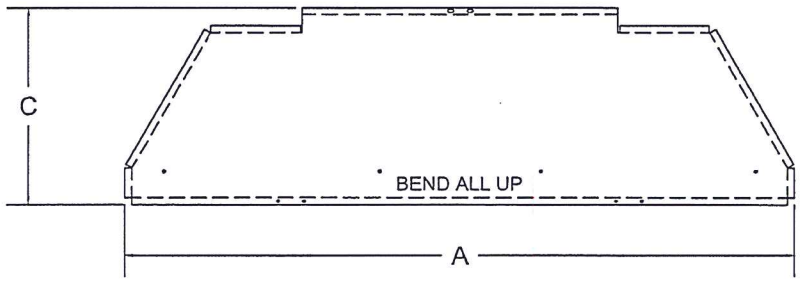

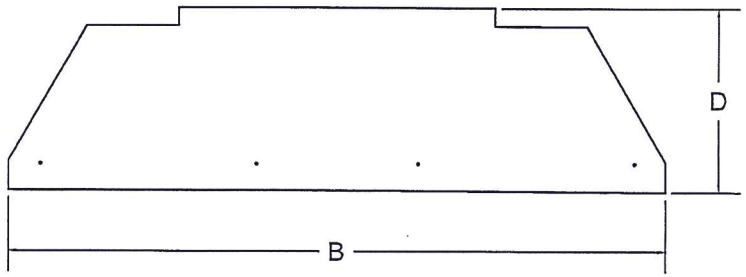

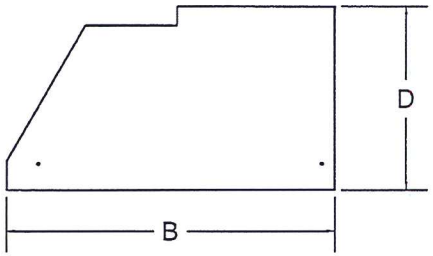

TWO PIECE ON 42NF/36FILTERED AND LARGER

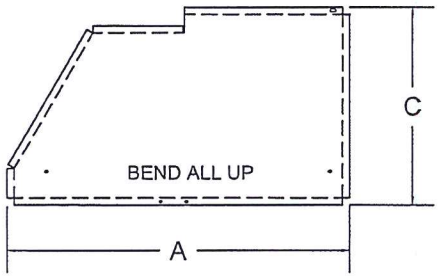

BEND ONE AS SHOWN AND ONE OPPOSITE

HOOD END

48	42	46	44	27.00	24.81	16	0.080
42	36	46	44	27.00	24.81	16	0.080
36	30	80	78	22.25	20.06	16	0.080
30	24	69	67	22.25	20.06	16	0.080
24	20	59	57	20.50	18.25	18	0.063
20	--	53	51	19.50	17.31	18	0.063
NON FILTERED	FILTERED	A	B	C	D	STEEL	ALUM
SIZE		DIM	DIM	DIM	DIM	GAUGE	THICK

STEEL: ASTM A653 G90
ALUM: 3003H-14 OR EQUIVALENT

PRODUCT REVISED
as complying with the Florida Building Code
NOA-No. 24-0311.09
Expiration Date 05/12/2026
By
Miami-Dade Product Control

JERAY TRAVIS MILLER, ENGINEER
FLORIDA LICENSE #89925
FLORIDA STATE CERTIFICATE OF AUTHORITY #9104286
No 89925 STATE OF FLORIDA PROFESSIONAL ENGINEER
2/18/24

MAT'L	ASTM 653 G90	
DRAWN	BFS	08/15/15
DESIGNER	BFS	SHEET 3 OF 8

DO NOT SCALE DRAWING
TOLERANCES UNLESS OTHERWISE NOTED

DECIMAL	FRACTIONAL
.XX=±.063"	≤12"=±1/16"
.XXX=±.010"	>12" THRU 96"=±1/8"
.XXXX=±.001"	>96" THRU 144"=±1/4"
ANGULAR ±2°	>144"=±3/8"
	(NC)=NO INSPECTION REQ'D

LOREN COOK CO.
MANUFACTURERS OF AIR MOVING EQUIPMENT
SPRINGFIELD, MISSOURI

HSERIES PROPELLER FAN
ROOF MOUNTED
HURRICANE RATED

SIZE	DRAWING NO.	REV.
B	SD140501-75	B

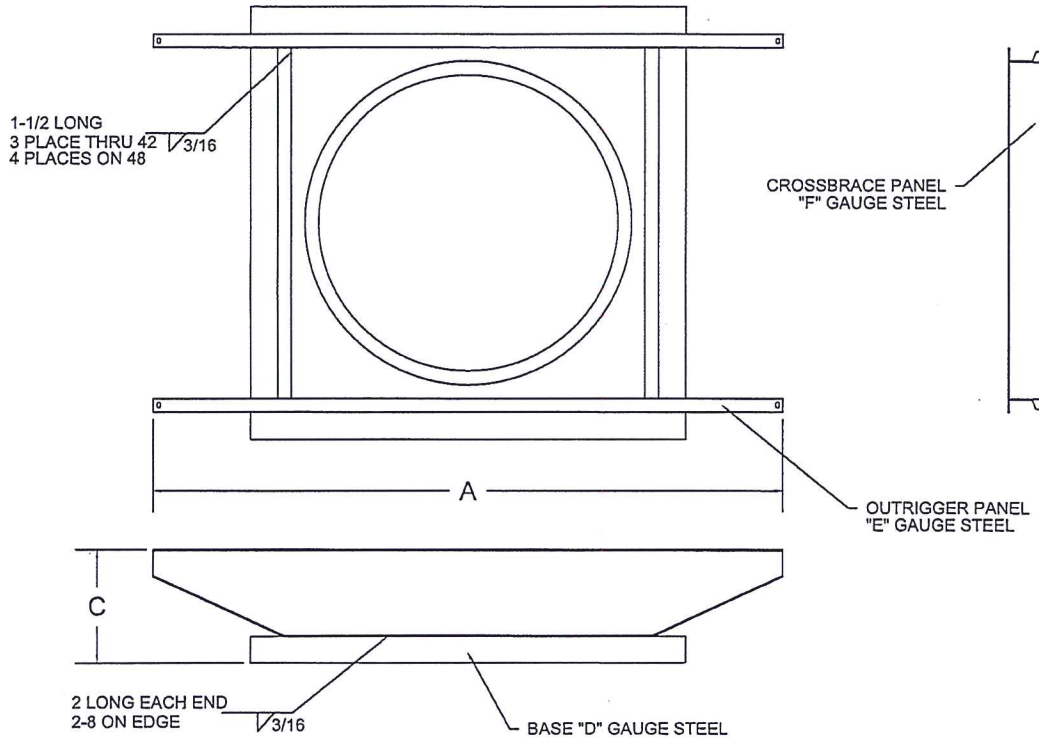

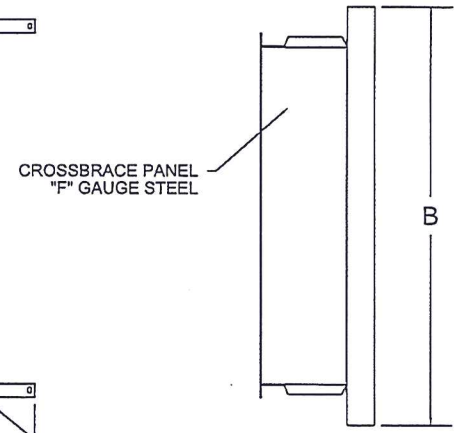

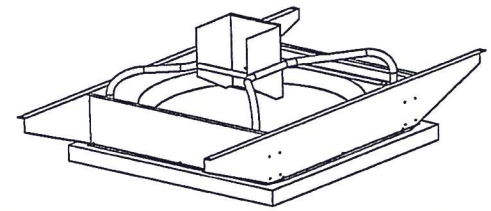

ASSEMBLY SHOWN WITH INTERNAL POWER ASSEMBLY

48	42	110	60	16.31	14	12	16
42	36	90	54	12.81	14	12	16
36	30	80	48	12.81	14	18	18
30	24	69	42	12.81	14	18	18
24	20	59	36	12.81	14	18	18
20	--	53	32	12.81	14	18	18
NONFILTERED	FILTERED	A	B	C	D	E	F
SIZE		DIM	DIM	DIM	GAUGE	GAUGE	GAUGE

PRODUCT REVISED
as complying with the Florida Building Code
NOA-No. 24-0311.09
Expiration Date 05/12/2026
By
Miami-Dade Product Control

JERRY TRAVIS MILLER- ENGINEER
FLORIDA LICENSE #88925
FLORIDA STATE CERTIFICATE OF AUTHORITY #9240

MAT'L	ASTM A1011	
DRAWN	BFS	08/15/15
DESIGNER	BFS	SHEET 4 OF 8

DO NOT SCALE DRAWING
TOLERANCES UNLESS OTHERWISE NOTED

DECIMAL	FRACTIONAL
.XX=±.063"	≤12"=±1/16"
.XXX=±.010"	>12" THRU 96"=±1/8"
.XXXX=±.001"	>96" THRU 144"=±1/4"
ANGULAR ±2°	>144"=±3/8"
	(NC)=NO INSPECTION REQ'D

LOREN COOK CO.
MANUFACTURERS OF AIR MOVING EQUIPMENT
SPRINGFIELD, MISSOURI

HSERIES PROPELLER FAN
ROOF MOUNTED
HURRICANE RATED

SIZE	DRAWING NO.	REV.
B	SD140501-75	B

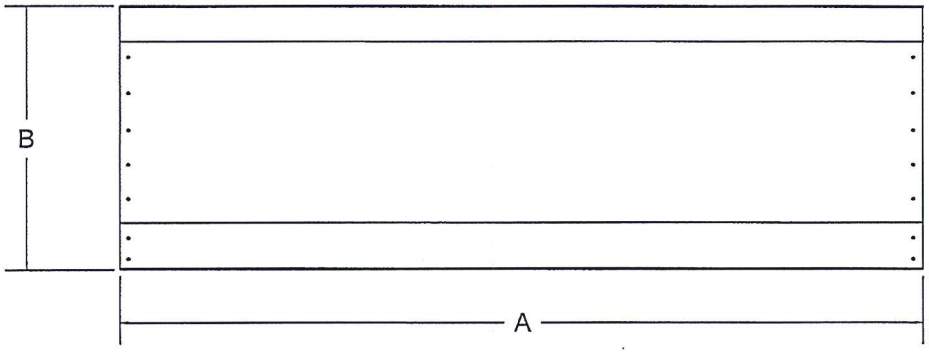

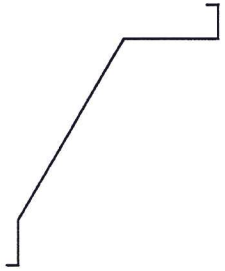

HOOD SIDE

48	42	110	24.81	16	0.080
42	36	90	24.81	16	0.080
36	30	80	20.06	16	0.080
30	24	69	18.50	18	0.063
24	20	59	18.25	18	0.063
20	--	53	17.31	18	0.063
NONFILTERED	FILTERED	A	B	STEEL	ALUM
SIZE		DIM	DIM	GAUGE	THICK

PRODUCT REVISED
as complying with the Florida Building Code
NOA-No. 24-0311.09
Expiration Date 05/12/2026
By
Miami-Dade Product Control

JERRY TRAVIS MILLER, ENGINEER
FLORIDA LICENSE #
FLORIDA STATE CERTIFICATE OF AUTHORITY #

JERRY TRAVIS MILLER
No. 89925
STATE OF FLORIDA
PROFESSIONAL ENGINEER
21/12/24

MAT'L	ASTM A653 G90	
DRAWN	BFS	08/15/15
DESIGNER	BFS	SHEET 5 OF 8

DO NOT SCALE DRAWING
TOLERANCES UNLESS OTHERWISE NOTED

DECIMAL	FRACTIONAL
.XX=±.063"	≤12"=±1/16"
.XXX=±.010"	>12" THRU 96"=±1/8"
.XXXX=±.001"	>96" THRU 144"=±1/4"
ANGULAR ±2°	>144"=±3/8"
	(NC)=NO INSPECTION REQ'D

LOREN COOK CO.
MANUFACTURERS OF AIR MOVING EQUIPMENT
SPRINGFIELD, MISSOURI

HSERIES PROPELLER FAN
ROOF MOUNTED
HURRICANE RATED

SIZE	DRAWING NO.	REV.
B	SD140501-75	B

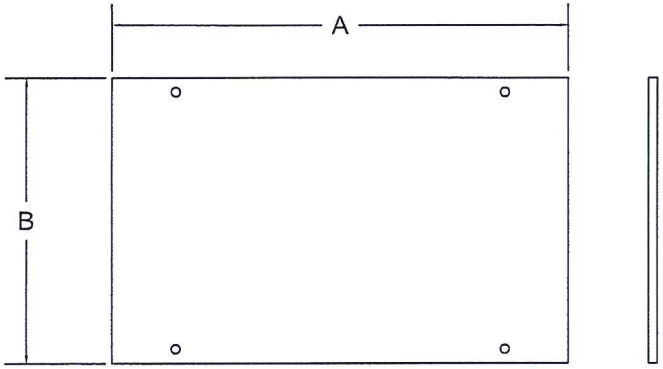

ONE PIECE TOPCAP SIZES 30NF/24F AND SMALLER

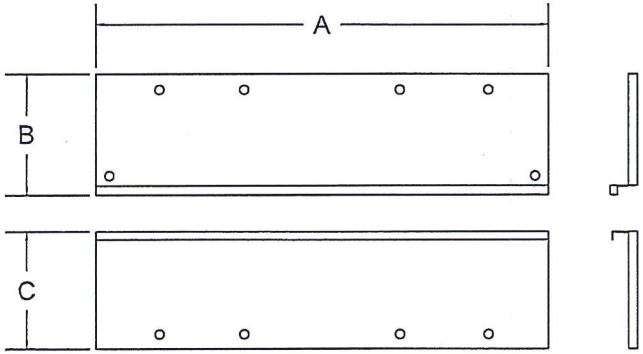

TWO PIECE TOPCAP SIZES 36NF/30F AND LARGER

48	42	110.25	22.38	22.38	16	0.080
42	36	90.25	22.38	22.38	16	0.080
36	30	80.25	17.38	17.38	16	0.080
30	24	69.25	32.63	--	18	0.063
24	20	59.25	32.63	--	18	0.063
20	--	53.50	30.50	--	18	0.063
NONFILTERED	FILTERED	A	B	C	STEEL	ALUM
SIZE		DIM	DIM	DIM	GAUGE	THICK

TOPCAP

PRODUCT REVISED
as complying with the Florida Building Code
NOA-No. 24-0311.09
Expiration Date 05/12/2026
By
Miami-Dade Product Control

JERRY TRAVIS MILLER-ENGINEER
FLORIDA LICENSE #89925
FLORIDA STATE CERTIFICATE OF AUTHORITY #27934

JERRY TRAVIS MILLER
No. 89925
STATE OF FLORIDA
PROFESSIONAL ENGINEER
2/16/24

MAT'L	ASTM A653 G90	
DRAWN	BFS	08/15/15
DESIGNER	BFS	SHEET 6 OF 8

DO NOT SCALE DRAWING
TOLERANCES UNLESS OTHERWISE NOTED

DECIMAL	FRACTIONAL
.XX=±.063"	≤12"=±1/16"
.XXX=±.010"	>12" THRU 96"=±1/8"
.XXXX=±.001"	>96" THRU 144"=±1/4"
ANGULAR ±2°	>144"=±3/8"
	(NC)=NO INSPECTION REQ'D

LOREN COOK CO.
MANUFACTURERS OF AIR MOVING EQUIPMENT
SPRINGFIELD, MISSOURI

HSERIES PROPELLER FAN
ROOF MOUNTED
HURRICANE RATED

SIZE	DRAWING NO.	REV.
B	SD140501-75	B

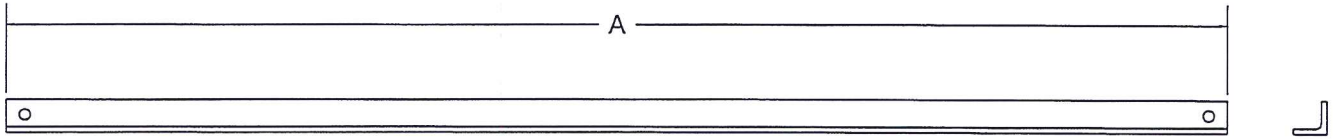

42NF, 36F,48NF,42F	29.50	4
30NF,24F, 36NF, 30F	41	2
UP TO 24/20F	32	2
SIZE	A	QUANTITY

ALUMINUM HOOD FLANGE REINFOREMENT
1.5X1.5X1/4 ALUMINUM ANGLE 6061-T6
REQUIRED ON OPTIONAL ALUMINUM HOOD ONLY

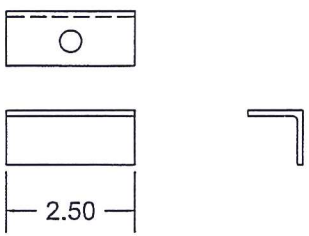

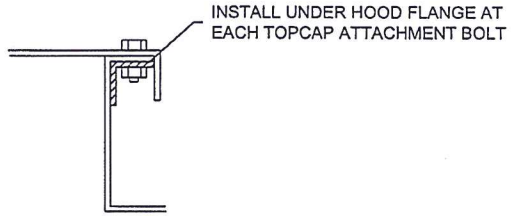

PRODUCT REVISED
as complying with the Florida Building Code
NOA-No. 24-0311.09
Expiration Date 05/12/2026
By
Miami-Dade Product Control

SIZE 36/30F AND LARGER	12
UP TO SIZE 30/24F	4
SIZE	QUANTITY

ALUMINUM TOPCAP ATTACHMENT REINFORCEMENT
1X1X1/8 ALUMINUM ANGLE 6061-T6
REQUIRED ON OPTIONAL ALUMINUM HOOD ONLY

JERRY TRAVIS MILLER, ENGINEER
FLORIDA LICENSE #59325
FLORIDA STATE CERTIFICATE OF AUTHORITY #P12388
JERRY TRAVIS MILLER
No. 59325
STATE OF FLORIDA
PROFESSIONAL ENGINEER
2/12/24

MAT'L	–	
DRAWN	BFS	08/15/15
DESIGNER	BFS	SHEET 7 OF 8

DO NOT SCALE DRAWING
TOLERANCES UNLESS OTHERWISE NOTED

DECIMAL	FRACTIONAL
.XX=±.063"	≤12"=±1/16"
.XXX=±.010"	>12" THRU 96"=±1/8"
.XXXX=±.001"	>96" THRU 144"=±1/4"
ANGULAR ±2°	>144"=±3/8"
	(NC)=NO INSPECTION REQ'D

LOREN COOK CO.
MANUFACTURERS OF AIR MOVING EQUIPMENT
SPRINGFIELD, MISSOURI

HSERIES PROPELLER FAN
ROOF MOUNTED
HURRICANE RATED

SIZE	DRAWING NO.	REV.
B	SD140501-75	B

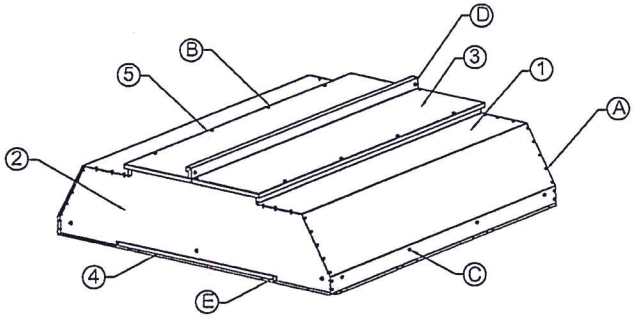

FASTENER TABLE							
E	5/16 X 1 HEX BOLT /FLANGE NUT/ USS WASHER (1"OD) (ALUM ONLY)	4	4	4	8	8	8
D	5/16 X 1 HEX BOLT / FLANGE NUT / USS WASHER (1"OD)	--	--	--	2	2	2
C	5/16 X 1 HEX BOLT / FLANGE NUT / USS WASHER (1"OD)	0	14	14	14	16	20
B	5/16 X 1 HEX BOLT / HEX NUT / USS WASHER (1"OD)	4	4	4	12	12	12
A	1/4 X 3/4 LONG SELF-TAPPING SCREWS	32	32	40	40	44	44
ITEM	DESCRIPTION	20 NONFILTER	24 NONFILTER 20 FILTER	30 NONFILTER 24 FILTER	36 NONFILTER 30 FILTER	42 NONFILTER 36 FILTER	48 NONFILTER 42 FILTER
		QUANTITIES					

5	TOPCAP FLANGE REIN ANGLE	7
4	HOOD FLANGE REIN ANGLE	7
3	TOPCAP	6
2	HOOD END	3
1	HOOD SIDE	5
ITEM	PART NAME	SHEET

PRODUCT REVISED
as complying with the Florida Building Code
NOA-No. 24-0311.09
Expiration Date 05/12/2026
By
Miami-Dade Product Control

JERRY TRAVIS MILLER-ENGINEER
FLORIDA LICENSE #89925
FLORIDA STATE CERTIFICATE OF AUTHORITY #P13-1269
JERRY TRAVIS MILLER
No 89925
STATE OF
FLORIDA
PROFESSIONAL ENGINEER
2/16/24

MAT'L	–	
DRAWN	BFS	08/15/15
DESIGNER	BFS	SHEET 8 OF 8

DO NOT SCALE DRAWING
TOLERANCES UNLESS OTHERWISE NOTED

DECIMAL	FRACTIONAL
.XX=±.063"	≤12"=±1/16"
.XXX=±.010"	>12" THRU 96"=±1/8"
.XXXX=±.001"	>96" THRU 144"=±1/4"
ANGULAR ±2°	>144"=±3/8"

(NC)=NO INSPECTION REQ'D

LOREN COOK CO.
MANUFACTURERS OF AIR MOVING EQUIPMENT
SPRINGFIELD, MISSOURI

HSERIES PROPELLER FAN
ROOF MOUNTED
HURRICANE RATED

SIZE	DRAWING NO.	REV.
B	SD140501-75	B

MIAMI-DADE COUNTY
PRODUCT CONTROL SECTION
11805 SW 26 Street, Room 208
Miami, Florida 33175-2474
T (786) 315-2590 F (786) 315-2599
www.miamidade.gov/economy

DEPARTMENT OF REGULATORY AND ECONOMIC RESOURCES (RER)
BOARD AND CODE ADMINISTRATION DIVISION

NOTICE OF ACCEPTANCE (NOA)

Loren Cook Company
2015 E. Dale Street
Springfield, MO 65803

SCOPE: This NOA is being issued under the applicable rules and regulations governing the use of construction materials. The documentation submitted has been reviewed and accepted by Miami-Dade County RER-Product Control Section to be used in Miami Dade County and other areas where allowed by the Authority Having Jurisdiction (AHJ).

This NOA shall not be valid after the expiration date stated below. The Miami-Dade County Product Control Section (In Miami Dade County) and/or the AHJ (in areas other than Miami Dade County) reserve the right to have this product or material tested for quality assurance purposes. If this product or material fails to perform in the accepted manner, the manufacturer will incur the expense of such testing and the AHJ may immediately revoke, modify, or suspend the use of such product or material within their jurisdiction. RER reserves the right to revoke this acceptance if it is determined by Miami-Dade County Product Control Section that this product or material fails to meet the requirements of the applicable building code.

This product is approved as described herein and has been designed to comply with the Florida Building Code, including the High Velocity Hurricane Zone.

DESCRIPTION: Model "TCNHBLE" Steel Rooftop Exhaust Fan – L.M.I.

APPROVAL DOCUMENT: Drawing No. **SD140723-05**, titled "TCNHBLE 1x2 for TCNHBLE sizes 100-300", sheet 1 through 13 of 13, dated 07/22/14, with revision **B** dated 02/16/24, prepared by manufacturer, signed and sealed by Jerry Travis Miller, P.E., bearing the Miami-Dade County Product Control Renewal stamp with the Notice of Acceptance number and expiration date by the Miami-Dade County Product Control Section.

MISSILE IMPACT RATING: Large and Small Missile Impact Resistant

LABELING: A permanent label with the manufacturer's name or logo, manufacturing plant's city, state, model/series, and following statement: "Miami-Dade County Product Control Approved", is to be located on each unit.

RENEWAL of this NOA shall be considered after a renewal application has been filed and there has been no change in the applicable building code negatively affecting the performance of this product.

TERMINATION of this NOA will occur after the expiration date or if there has been a revision or change in the materials, use, and/or manufacture of the product or process. Misuse of this NOA as an endorsement of any product, for sales, advertising or any other purposes shall automatically terminate this NOA. Failure to comply with any section of this NOA shall be cause for termination and removal of NOA.

ADVERTISEMENT: The NOA number preceded by the words Miami-Dade County, Florida, and followed by the expiration date may be displayed in advertising literature. If any portion of the NOA is displayed, then it shall be done in its entirety.

INSPECTION: A copy of this entire NOA shall be provided to the user by the manufacturer or its distributors and shall be available for inspection at the job site at the request of the Building Official.

This NOA **renews NOA No. 24-0311.08** and consists of this page 1 and evidence pages E-1 and E-2, as well as approval document mentioned above.

The submitted documentation was reviewed by **Manuel Perez, P.E.**

MIAMI-DADE COUNTY APPROVED

3/11/25

Loren Cook Company

NOTICE OF ACCEPTANCE: EVIDENCE SUBMITTED

1. EVIDENCE SUBMITTED UNDER PREVIOUS NOA's

A. DRAWINGS

1. Manufacturer's die drawings and sections.
   (Submitted under NOA No. 14-0909.12)
2. Drawing No. **SD140723-05**, titled "TCNHBLE 1x2 for TCNHBLE sizes 100-300", sheet 1 through 13 of 13, dated 07/22/14, with revision **B** dated 02/16/24, prepared by manufacturer, signed and sealed by Jerry Travis Miller, P.E.
   (Submitted under NOA No. 24-0311.08)

B. TESTS

1. Test reports on: 1) Uniform Static Air Pressure Test, Loading per FBC TAS 202-94
   2) Large Missile Impact Test per FBC, TAS 201-94
   3) Lateral Force Test per ASTM E72 (Modified)
   4) Tensile Strength Test per ASTM E8

   along with marked-up drawings and installation diagram of Models TCNHBLE, 100 and 300 rooftop exhaust fans, prepared by Architectural Testing, Inc. Test Report No. **C9440.01-801-18**, dated 01/15/14, signed and sealed by Vinu J. Abraham, P.E.
   (Submitted under NOA No. 14-0909.12)

C. CALCULATIONS

1. Wind loads and anchor calculations, prepared by Miller Engineering, dated 07/21/23, signed and sealed by Jerry T. Miller, P.E.
   (Submitted under NOA No. 24-0311.08)

D. QUALITY ASSURANCE

1. Miami-Dade Department of Regulatory and Economic Resources (RER)

E. MATERIAL CERTIFICATIONS

1. None.

F. STATEMENTS

1. Statement letter of code conformance, complying with the **FBC 8th Edition (2023)** dated 02/23/24, issued by Miller Engineering, signed and sealed by Jerry T. Miller, P.E.
   (Submitted under NOA No. 24-0311.08)
2. Statement letter of no financial interest, dated 10/12/2023, issued by Miller Engineering, signed and sealed by Jerry T. Miller, P.E.
   (Submitted under NOA No. 24-0311.08)

Manuel Perez

Manuel Perez, P.E.
Product Control Examiner
NOA No. 25-0102.07
Expiration Date: March 12, 2030
Approval Date: March 20, 2025

NOTICE OF ACCEPTANCE: EVIDENCE SUBMITTED

1. EVIDENCE SUBMITTED UNDER PREVIOUS NOA's (COMPLETE)

G. OTHERS

1. Notice of Acceptance No. **21-0405.12**, issued to Loren Cook Company for their Model "TCNHBLE" Steel Rooftop Exhaust Fan – L.M.I., approved on 06/24/21 and expiring on 03/12/25.

2. NEW EVIDENCE SUBMITTED UNDER

A. DRAWINGS

1. None.

B. TESTS

1. None.

C. CALCULATIONS

1. None.

D. QUALITY ASSURANCE

1. Miami-Dade Department of Regulatory and Economic Resources (RER)

E. MATERIAL CERTIFICATIONS

1. None.

F. STATEMENTS

1. None.

G. OTHERS

1. Notice of Acceptance No. **24-0311.08**, issued to Loren Cook Company for their Model "TCNHBLE" Steel Rooftop Exhaust Fan – L.M.I., approved on 04/18/24 and expiring on 03/12/25.

Manuel Perez

Manuel Perez, P.E.
Product Control Examiner
NOA No. 25-0102.07
Expiration Date: March 12, 2030
Approval Date: March 20, 2025

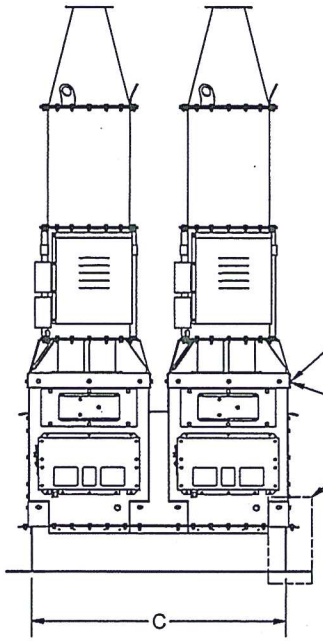

PRODUCT RENEWED
as complying with the Florida Building Code
NOA-No. 25-0102.07
Expiration Date: 03/12/2030
By: Manuel Perez
Miami-Dade Product Control

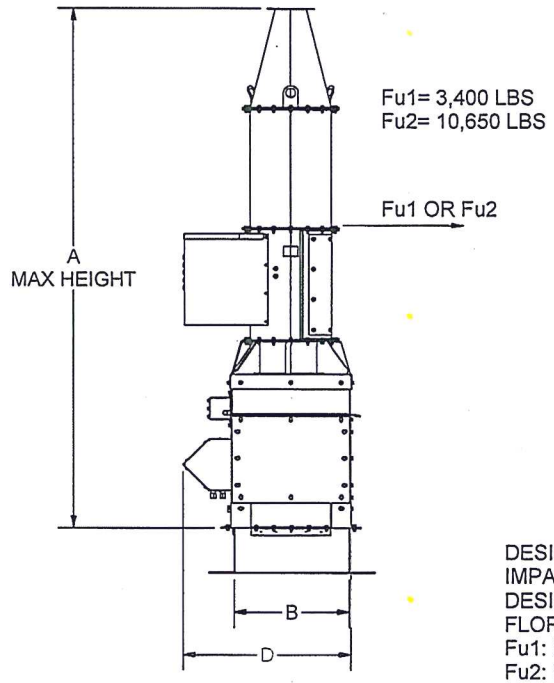

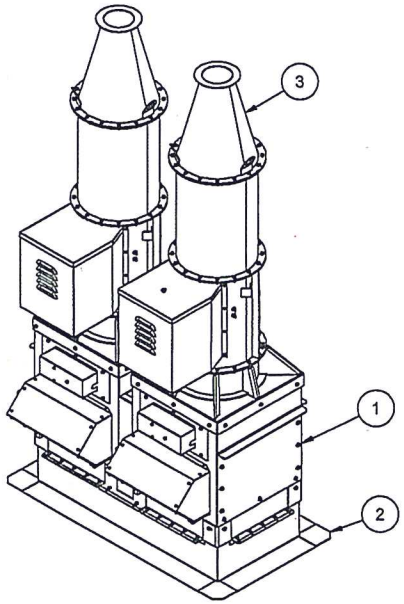

DESIGN PRESSURE: +100PSF/-100PSF
IMPACT RATING: LARGE MISSILE IMPACT RESISTANT
DESIGN, TESTING, AND INSTALLATION CONFORMS TO
FLORIDA BUILDING CODE
Fu1: ULTIMATE LATERAL FORCE PER EACH MODEL TCNHBLE 100
Fu2: ULTIMATE LATERAL FORCE PER EACH MODEL TCNHBLE 300

UNIT SIZE	A DIM	B DIM	C DIM	D DIM	WEIGHT IN LBS	F PLCS
300	153	58 7/8	122 3/16	74	4871	20
270	146 3/4	52 7/8	110 3/16	67	4275	20
245	135	48 7/8	102 3/16	63	3736	16
225	121 1/2	46 7/8	98 3/16	60	3511	16
210	124	42 7/8	90 3/16	56	2851	16
195	120	40 7/8	86 3/16	54	2728	16
180	120	36 7/8	78 3/16	50	2397	16
165	120	33	70 5/16	46	2183	16
150	120	31	66 5/16	42	2008	16
135	120	29	62 5/16	40	1828	16
120	120	27 1/16	58 5/16	38	1511	12
100	120	23 1/16	50 5/16	34	1289	12

PRODUCT REVISED
as complying with the Florida Building Code
NOA-No. 24-0311.08
Expiration Date 03/12/2025
By
Miami-Dade Product Control

JERRY TRAVIS MILLER- ENGINEER
FLORIDA LICENSE #89025
FLORIDA STATE CERTIFICATE OF AUTHORITY #P1D4388
JERRY TRAVIS MILLER
No. 89025
STATE OF FLORIDA
PROFESSIONAL ENGINEER
2/12/24

ITEM	SHT #	DESCRIPTION	MATERIAL SPEC
4	-	3/8" X 1" HEX HEAD BOLTS	-
3	SHT 3	TOP ASSEMBLY	-
2	SHT 2	1 X 2 CURB	-
1	SHT 4	TCNHBLE MIXING BOX	-

MAT'L: -

DRAWN	JWA	7/22/2014
DESIGNER	BFS	SHEET 1 OF 13

LOREN COOK CO.
MANUFACTURERS OF AIR MOVING EQUIPMENT
SPRINGFIELD, MISSOURI

DO NOT SCALE DRAWING
TOLERANCES UNLESS OTHERWISE NOTED

DECIMAL
.XX = ± .063"
.XXX = ± .010"
.XXXX = ± .001"

FRACTIONAL
≤12" = ± 1/16"
>12" THRU 96" = ± 1/8"
>96 THRU 144" = ± 1/4"
>144" = ± 3/8"

ANGULAR
± 2°

(NC) = NO INSPECTION REQ'D

TCNHBLE 1X2
FOR TCNHBLE
SIZES 100-300

SIZE	DRAWING NO.	REV.
B	SD140723-05	B

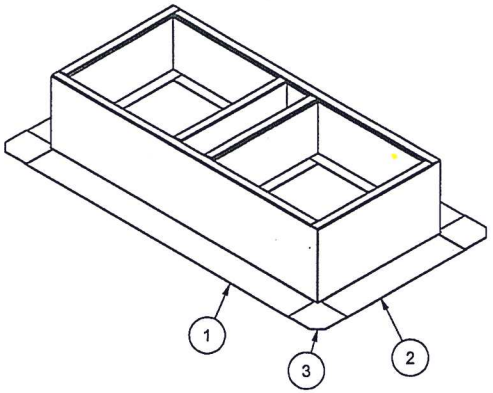

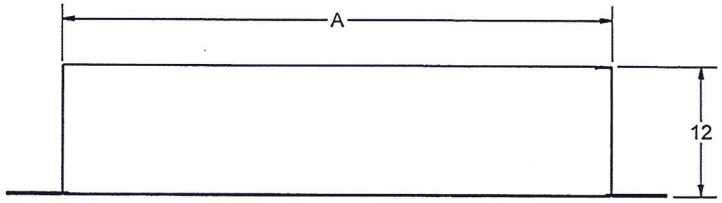

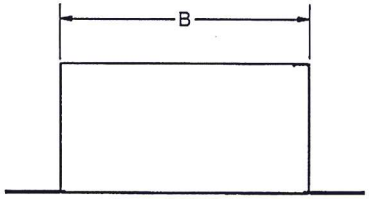

300	122 3/16	58 7/8	509
270	110 3/16	52 7/8	458
245	102 3/16	48 7/8	423
225	98 3/16	46 7/8	406
210	90 3/16	42 7/8	372
195	86 3/16	40 7/8	355
180	78 3/16	36 7/8	320
165	70 5/16	33	287
150	66 5/16	31	270
135	62 5/16	29	253
120	58 5/16	27 1/16	236
100	50 5/16	23 1/16	201
UNIT	A	B	CURB
SIZE	DIM	DIM	WEIGHT

PRODUCT RENEWED
as complying with the Florida Building Code
NOA-No. 25-0102.07
Expiration Date: 03/12/2030
By: Manuel Perez
Miami-Dade Product Control

PRODUCT REVISED
as complying with the Florida Building Code
NOA-No. 24-0311.08
Expiration Date 03/12/2025
By [illegible]
Miami-Dade Product Control

JERRY TRAVIS MILLER- ENGINEER
FLORIDA LICENSE #80225
FLORIDA STATE CERTIFICATE OF AUTHORITY #FV24398
JERRY TRAVIS MILLER
No. 80225
STATE OF FLORIDA
PROFESSIONAL ENGINEER
2/12/24

NOTES:
1) THE TCNHBLE REFERRED TO HEREIN REFERS TO ALL LOREN COOK MODEL TCNHBLE MODELS THAT ARE CONSTRUCTED OF THE SAME OUTER HOUSING COMPONENTS AND AVAILABLE AS A SINGLE FANS OR A DUAL FAN INSTALLATIONS EITHER ON MIXING BOXES, ISOLATION BOXES OR MOUNTED DIRECTLY TO LEC ROOF CURB.
2) THIS APPROVAL IS FOR THE STRUCTURAL CAPACITY OF THE EXTERIOR HOUSING ONLY, IT DOES NOT INCLUDE ANY INTERIOR MECHANISM OR ELECTRICAL PART.
3) THIS PRODUCT HAS NOT BEEN TESTED FOR WATER PENETRATION ACCORDING TO FLORIDA BUILDING CODE TAS 100(A) WIND DRIVEN RAIN TEST. IT CANNOT BE INSTALLED WITHIN RIDGE AREA FBC 1523.6.5.2.13.
4) THE INSTALLER IS RESPONSIBLE FOR CHECKING THAT ALL FASTENERS ARE PROPERLY INSTALLED AND ACCESS PANEL ARE IN PLACE BEFORE PUTTING THE UNIT INTO SERVICE.

ITEM	SHT #	DESCRIPTION	MATERIAL SPEC
3	-	LEC CORNER FLANGE	12 GA STEEL
2	-	LEC SIDE PANEL	12 GA STEEL
1	-	LEC 1x2 SIDE PANEL	12 GA STEEL

MAT'L

DRAWN	JWA	7/22/2014
DESIGNER	BFS	SHEET 2 OF 13

LOREN COOK CO.
MANUFACTURERS OF AIR MOVING EQUIPMENT
SPRINGFIELD, MISSOURI

DO NOT SCALE DRAWING
TOLERANCES UNLESS OTHERWISE NOTED

DECIMAL
.XX = ± .063"
.XXX = ± .010"
.XXXX = ± .001"

FRACTIONAL
≤12" = ± 1/16"
>12" THRU 96" = ± 1/8"
>96 THRU 144" = ± 1/4"
>144" = ± 3/8"

ANGULAR
± 2°

(NC) = NO INSPECTION REQ'D

1 X 2 CURB
FOR TCNHBLE
SIZES 100-300

SIZE	DRAWING NO.	REV.
B	SD140723-05	B

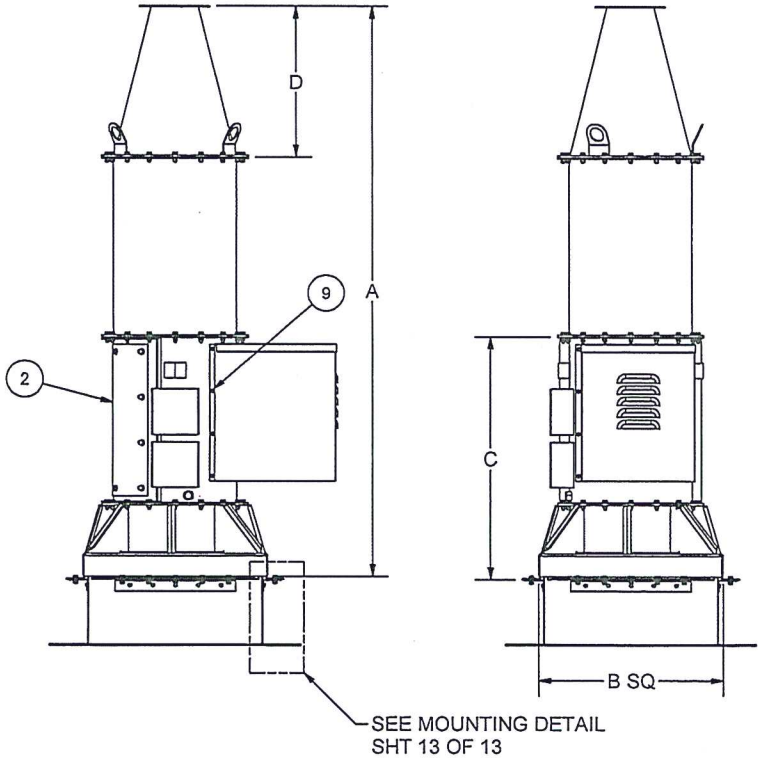

300	122	60	57 1/2	60
270	120	54	56	56
245	120	50	50 1/2	50
225	120	48	45	44
210	120	44	43 1/2	42
195	120	42	43	39
180	120	38	40 1/2	35
165	120	34	38	30
150	120	32	36 1/2	29
135	120	30	34	26
120	120	28	33	22
100	120	24	32	20
UNIT	A	B	C	D
SIZE	DIM	DIM	DIM	DIM

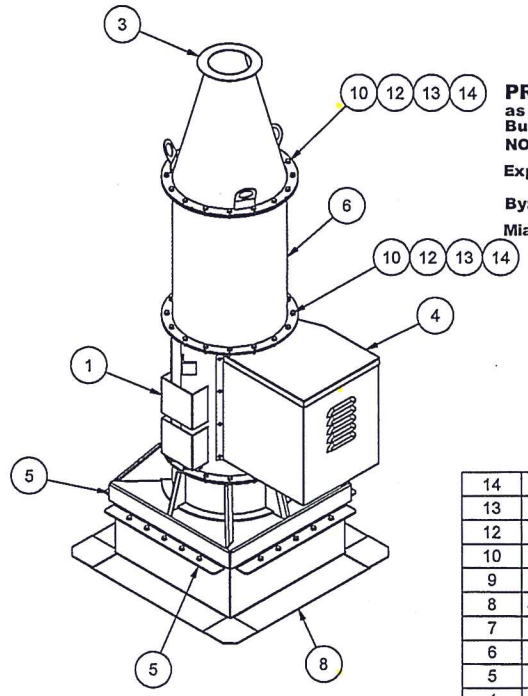

PRODUCT RENEWED
as complying with the Florida Building Code
NOA-No. 25-0102.07
Expiration Date: 03/12/2030
By: Manuel Perez
Miami-Dade Product Control

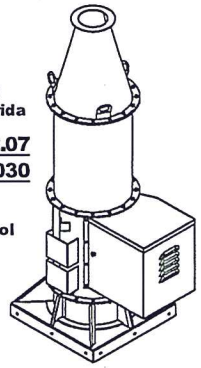

TCNHBLE FOR MIXING BOX AND ISOLATION BOX

CARBON STEEL: SY MIN=50KSI

ITEM	SHT #	DESCRIPTION	MATERIAL SPEC
14	-	NUT	-
13	-	LOCKWASHER	-
12	-	WASHER	-
10	-	3/8" X 1" HEX HEAD BOLT	-
9	-	1/4 X 3/4 TEK SCREWS	-
8	SHT 12	1 X 1 CURB	-
7	-	CURB MOUNTING BRACKET	10 GA STEEL
6	SHT 8	DRUM EXTENSION	-
5	SHT 7	CURB CAP WELDMENT	-
4	SHT 6	MOTOR COVER WELDMENT	-
3	SHT 5	TCNHBLE NOZZLE WELDMENT	-
2	-	ACCESS DOOR SIZES 100-210	12 GA STEEL
2	-	ACCESS DOOR SIZES 225-300	10 GA STEEL
1	SHT 10	HOUSING WELDMENT SIZES 225-300	-
1	SHT 9	HOUSING WELDMENT SIZES 100-210	-
MAT'L			

PRODUCT REVISED
as complying with the Florida Building Code
NOA-No. 24-0311.08
Expiration Date 03/12/2025
By
Miami-Dade Product Control

JERRY TRAVIS MILLER- ENGINEER
FLORIDA LICENSE #68925
FLORIDA STATE CERTIFICATE OF AUTHORITY #FV24088
No 68925 STATE OF FLORIDA PROFESSIONAL ENGINEER
7/14/14

DRAWN	JWA	7/22/2014
DESIGNER	BFS	SHEET 3 OF 13

DO NOT SCALE DRAWING
TOLERANCES UNLESS OTHERWISE NOTED

DECIMAL
.XX = ± .063"
.XXX = ± .010"
.XXXX = ± .001"

FRACTIONAL
≤12" = ± 1/16"
>12" THRU 96" = ± 1/8"
>96 THRU 144" = ± 1/4"
>144" = ± 3/8"

ANGULAR
± 2°

(NC) = NO INSPECTION REQ'D

LOREN COOK CO.
MANUFACTURERS OF AIR MOVING EQUIPMENT
SPRINGFIELD, MISSOURI

TCNHBLE
FOR TCNHBLE
SIZES 100-300

SIZE	DRAWING NO.	REV.
B	SD140723-05	B

300	123 1/4	59 3/4	38 1/4
270	111 1/4	53 3/4	37 1/2
245	103 1/4	49 3/4	37 1/2
225	99 1/4	47 3/4	35 1/4
210	91 1/4	43 3/4	34 1/4
195	87 1/4	41 3/4	35 3/4
180	79 1/4	37 3/4	35
165	71 1/4	33 3/4	34
150	67 1/4	31 3/4	32 1/2
135	63 1/4	29 3/4	31 3/4
120	59 1/4	27 3/4	31 1/2
100	51 1/4	23 3/4	30 1/2
UNIT	A	B	C
SIZE	DIM	DIM	DIM

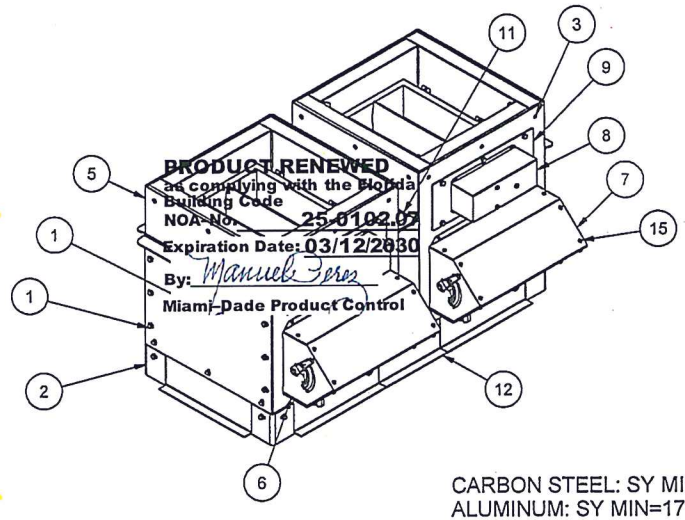

PRODUCT RENEWED
as complying with the Florida Building Code
NOA-No. 25-0102.07
Expiration Date: 03/12/2030
By: Manuel Perez
Miami-Dade Product Control

CARBON STEEL: SY MIN=50KSI
ALUMINUM: SY MIN=17KSI

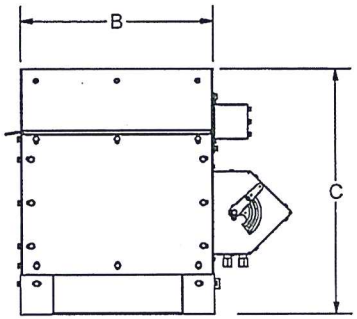

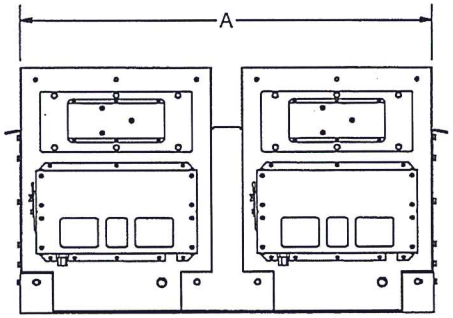

ITEM	SHT #	DESCRIPTION	MATERIAL SPEC
15	-	1/4" X 3/4" TEK SCREWS	-
14	-	3/8" X 1" HEX HEAD BOLT	-
13	-	CURB MOUNTING BRACKET	10 GA STEEL
12	-	ADAPTOR PANEL	10 GA STEEL
11	-	TOP CHANNEL, ADAPTOR FRAME	7 GA STEEL
10	-	CURB MOUNTING BRACKET	10 GA STEEL
9	-	DAMPER DOOR	7 GA STEEL
8	-	ACTUATOR COVER, WRAP	18 GA STEEL
7	-	WEATHER HOOD COVER	16 GA STEEL
6	-	WEATHER HOOD SIDE	12 GA STEEL
5	-	UPPER SIDE PANEL	10 GA STEEL
4	-	LOWER FRAME SIDE PANEL	10 GA STEEL
3	-	DAMPER PANEL	10 GA STEEL
2	-	CORNER ANGLE	1/4 STEEL
1	-	ACCESS DOOR SIZES 135-300	.25 ALUM
1	-	ACCESS DOOR SIZES 100-120	.19 ALUM

MAT'L

DRAWN	JWA	7/22/2014
DESIGNER	BFS	SHEET 4 OF 13

LOREN COOK CO.
MANUFACTURERS OF AIR MOVING EQUIPMENT
SPRINGFIELD, MISSOURI

DO NOT SCALE DRAWING
TOLERANCES UNLESS OTHERWISE NOTED

DECIMAL
.XX = ± .063"
.XXX = ± .010"
.XXXX = ± .001"

FRACTIONAL
≤12" = ± 1/16"
>12" THRU 96" = ± 1/8"
>96 THRU 144" = ± 1/4"
>144" = ± 3/8"

ANGULAR
± 2°

(NC) = NO INSPECTION REQ'D

1 X 2 MIXING BOX
FOR TCNHBLE
SIZES 100-300

SIZE	DRAWING NO.	REV.
B	SD140723-05	B

PRODUCT RENEWED
as complying with the Florida Building Code
NOA-No. 25-0102.07
Expiration Date: 03/12/2030
By: Manuel Perez
Miami-Dade Product Control

PRODUCT REVISED
as complying with the Florida Building Code
NOA-No. 24-0311.08
Expiration Date 03/12/2025
By
Miami-Dade Product Control

JERRY TRAVIS MILLER, ENGINEER
FLORIDA LICENSE #89925
FLORIDA STATE CERTIFICATE OF AUTHORITY #9734266
JERRY TRAVIS MILLER ENGINEER No 89925 STATE OF FLORIDA PROFESSIONAL ENGINEER
2/8/24

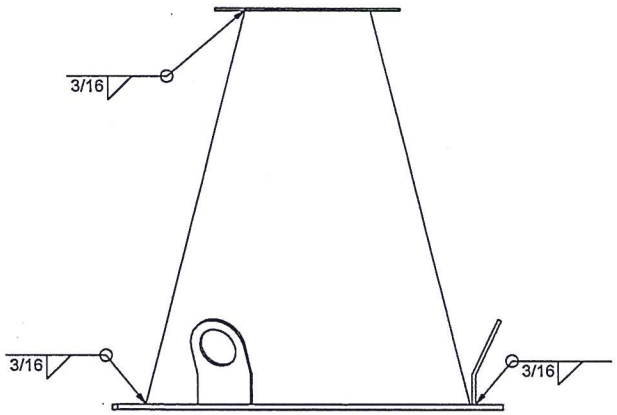

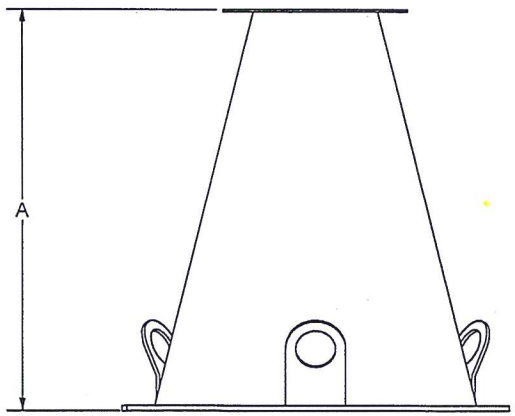

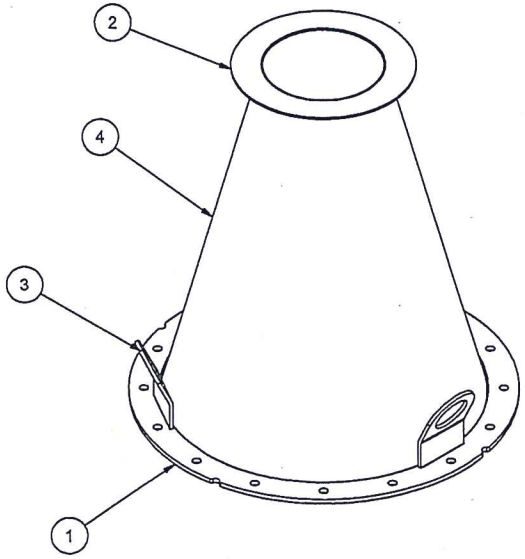

PRODUCT RENEWED
as complying with the Florida Building Code
NOA-No. 25-0102.07
Expiration Date: 03/12/2030
By: Manuel Perez
Miami-Dade Product Control

300	60
270	56
245	50
225	44
210	42
195	39
180	35
165	30
150	29
135	26
120	22
100	20
UNIT	A
SIZE	DIM

PRODUCT REVISED
as complying with the Florida Building Code
NOA-No. 24-0311.08
Expiration Date 03/12/2025
By
Miami-Dade Product Control

JERRY TRAVIS MILLER, ENGINEER
FLORIDA LICENSE #89925
FLORIDA STATE CERTIFICATE OF AUTHORITY #P7243086
JERRY TRAVIS MILLER
No. 89925
STATE OF FLORIDA
PROFESSIONAL ENGINEER
2/18/24

CARBON STEEL: SY MIN=50KSI

ITEM	SHT #	DESCRIPTION	MATERIAL SPEC
4	-	TCNHBLE CONE	12 GA STEEL
3	-	LIFTING LUG	10 GA STEEL
2	-	NOZZLE FLANGE	12 GA STEEL
1	-	FLANGE, W/ HOLES	1/4 STEEL

MAT'L	-	
DRAWN	JWA	7/22/2014
DESIGNER	BFS	SHEET 5 OF 13

LOREN COOK CO.
MANUFACTURERS OF AIR MOVING EQUIPMENT
SPRINGFIELD, MISSOURI

DO NOT SCALE DRAWING
TOLERANCES UNLESS OTHERWISE NOTED

DECIMAL
.XX = ± .063"
.XXX = ± .010"
.XXXX = ± .001"

FRACTIONAL
≤12" = ± 1/16"
>12" THRU 96" = ± 1/8"
>96 THRU 144" = ± 1/4"
>144" = ± 3/8"

ANGULAR
± 2°

(NC) = NO INSPECTION REQ'D

TCNHBLE NOZZLE WELDMENT
FOR TCNHBLE
SIZES 100-300

SIZE	DRAWING NO.	REV.
B	SD140723-05	B

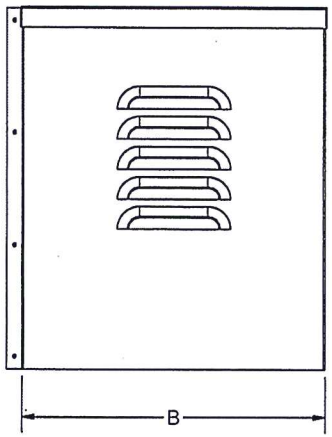

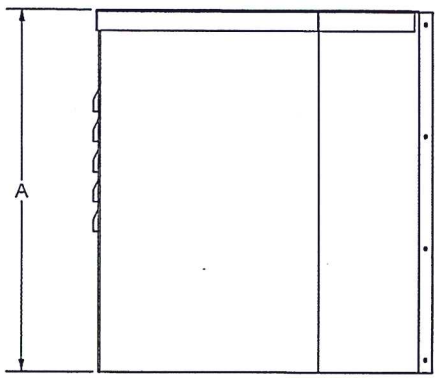

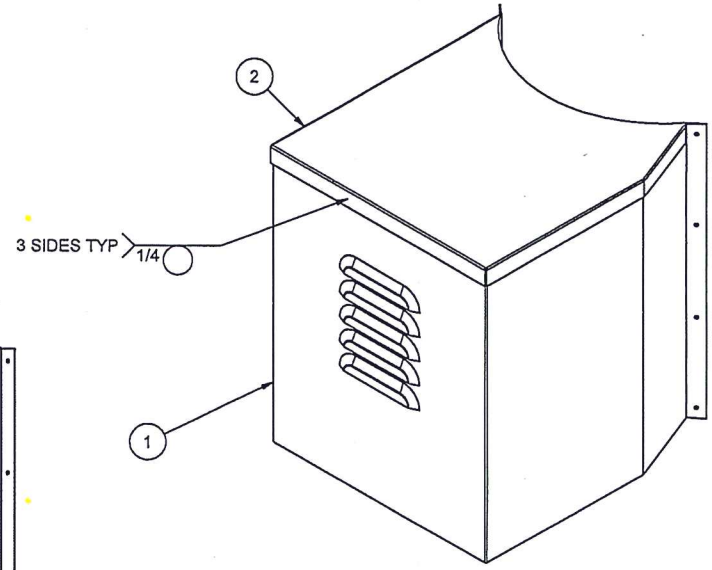

PRODUCT RENEWED
as complying with the Florida Building Code
NOA-No. 25-0102.07
Expiration Date: 03/12/2030
By: Manuel Perez
Miami-Dade Product Control

PRODUCT REVISED
as complying with the Florida Building Code
NOA-No. 24-0311.08
Expiration Date 03/12/2025
By _____
Miami-Dade Product Control

270-300	30 3/32	23
225-245	25 3/32	20
150-210	22 3/32	19
100-135	18 3/32	15
UNIT	A	B
SIZE	DIM	DIM

JERRY TRAVIS MILLER- ENGINEER
FLORIDA LICENSE #89925
FLORIDA STATE CERTIFICATE OF AUTHORITY #P1243290
JERRY TRAVIS MILLER
No 89925
STATE OF FLORIDA
PROFESSIONAL ENGINEER
2/18/24

CARBON STEEL: SY MIN=50KSI

ITEM	SHT #	DESCRIPTION	MATERIAL SPEC
2	-	MOTOR COVER TOP	16 GA STEEL
1	-	MOTOR COVER WRAPPER	16 GA STEEL

MAT'L	-		
DRAWN	JWA	7/22/2014	
DESIGNER	BFS	SHEET 6 OF 13	

LOREN COOK CO.
MANUFACTURERS OF AIR MOVING EQUIPMENT
SPRINGFIELD, MISSOURI

DO NOT SCALE DRAWING
TOLERANCES UNLESS OTHERWISE NOTED

DECIMAL
.XX = ± .063"
.XXX = ± .010"
.XXXX = ± .001"

FRACTIONAL
≤12" = ± 1/16"
>12" THRU 96" = ± 1/8"
>96 THRU 144" = ± 1/4"
>144" = ± 3/8"

ANGULAR
± 2°

(NC) = NO INSPECTION REQ'D

MOTOR COVER WELDMENT
FOR TCNHBLE
SIZES 100-300

SIZE	DRAWING NO.	REV.
B	SD140723-05	B

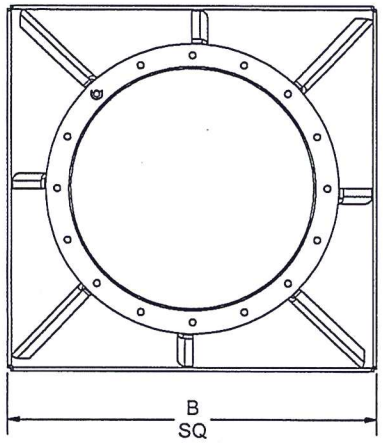

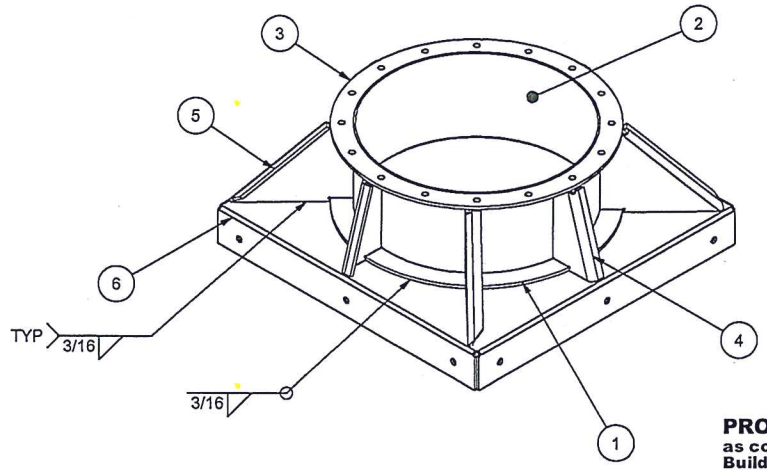

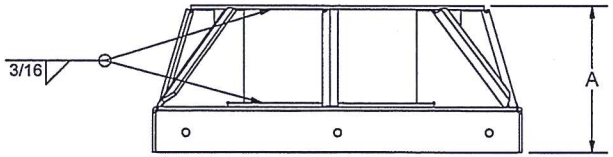

300	9 1/4	60
270	9 1/4	54
245	9 1/4	50
225	9 1/4	48
210	9 1/4	44
195	9 1/4	42
180	9 1/4	38
165	9 1/4	34
150	9 1/4	32
135	9 1/4	30
120	9 3/4	28
100	9 3/4	24
UNIT	A	B
SIZE	DIM	DIM

PRODUCT RENEWED
as complying with the Florida Building Code
NOA-No. 25-0102.07
Expiration Date: 03/12/2030
By: Manuel Feroz
Miami-Dade Product Control

PRODUCT REVISED
as complying with the Florida Building Code
NOA-No. 24-0311.08
Expiration Date 03/12/2025
By
Miami-Dade Product Control

JERRY TRAVIS MILLER, ENGINEER
FLORIDA LICENSE #89925
FLORIDA STATE CERTIFICATE OF AUTHORITY #P1343266
JERRY TRAVIS MILLER
No. 89925
STATE OF FLORIDA
PROFESSIONAL ENGINEER
2/14/24

CARBON STEEL: SY MIN=50KSI

ITEM	SHT #	DESCRIPTION	MATERIAL SPEC
6	-	CURB CAP	7 GA STEEL
5	-	CORNER GUSSET	1/4 STEEL
4	-	BASE GUSSET	1/4 STEEL
3	-	FLANGE, W/ HOLES	1/4 STEEL
2	-	UPPER DRUM	10 GA STEEL
1	-	FLANGE, W/O HOLES	1/4 STEEL

MAT'L	-	
DRAWN	JWA	7/22/2014
DESIGNER	BFS	SHEET 7 OF 13

DO NOT SCALE DRAWING
TOLERANCES UNLESS OTHERWISE NOTED

DECIMAL	FRACTIONAL
.XX = ± .063"	≤12" = ± 1/16"
.XXX = ± .010"	>12" THRU 96" = ± 1/8"
.XXXX = ± .001"	>96 THRU 144" = ± 1/4"
	>144" = ± 3/8"
ANGULAR ± 2°	(NC) = NO INSPECTION REQ'D

LOREN COOK CO.
MANUFACTURERS OF AIR MOVING EQUIPMENT
SPRINGFIELD, MISSOURI

CURB CAP WELDMENT
FOR TCNHBLE
SIZES 100-300

SIZE	DRAWING NO.	REV.
B	SD140723-05	B

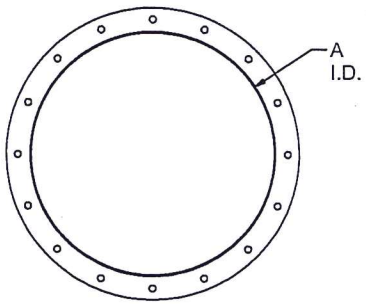

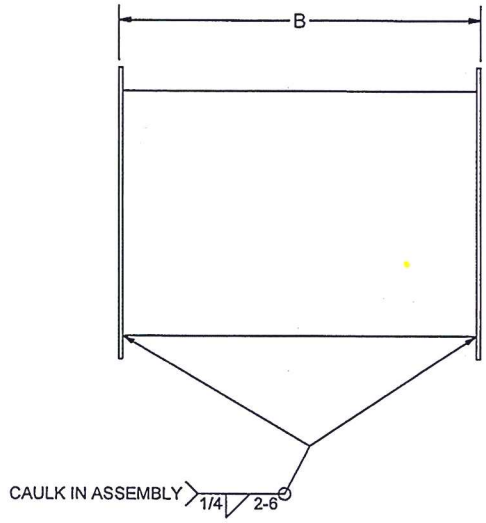

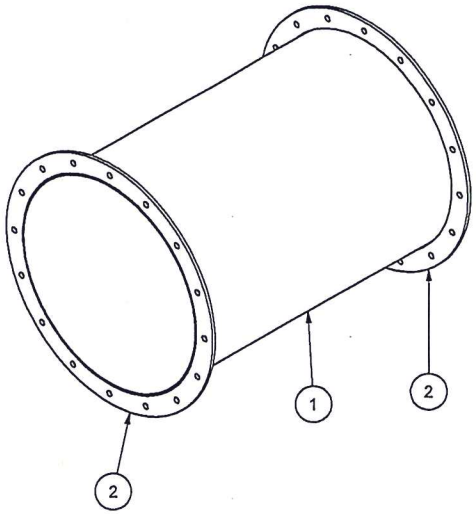

PRODUCT RENEWED
as complying with the Florida Building Code
NOA-No. 25-0102.07
Expiration Date: 03/12/2030
By: Manuel Perez
Miami-Dade Product Control

210	34	6 5/8
195	31	5 1/8
180	28	12 1/8
165	26	20 5/8
150	24	24 5/8
135	21	31 1/8
120	18	36 3/8
100	16	40 3/8
UNIT	A	B
SIZE	DIM	DIM
WITH MIXING BOX		

300	48	4 1/2
270	44	8 1/4
245	40	19 3/4
225	36	31 1/4
210	34	34 1/2
195	31	38 1/4
180	28	44 1/2
165	26	52
150	24	54 1/2
135	21	60 1/4
120	18	65 1/4
100	16	68 1/4
UNIT	A	B
SIZE	DIM	DIM
WITHOUT MIXING BOX		

PRODUCT REVISED
as complying with the Florida Building Code
NOA-No. 24-0311.08
Expiration Date 03/12/2025
By [signature]
Miami-Dade Product Control

JERRY TRAVIS MILLER- ENGINEER
FLORIDA LICENSE #89225
FLORIDA STATE CERTIFICATE OF AUTHORITY #FV3-0088
JERRY TRAVIS MILLER
No. 89225
STATE OF FLORIDA
PROFESSIONAL ENGINEER
7/22/14

CARBON STEEL: SY MIN=50KSI

ITEM	SHT #	DESCRIPTION	MATERIAL SPEC
-2	-	FLANGE, W/ HOLES	1/4 STEEL
1	-	UPPER DRUM SIZES 225-300	10 GA STEEL
1	-	UPPER DRUM SIZES 100-210	12 GA STEEL

MAT'L	-	
DRAWN	JWA	7/22/2014
DESIGNER	BFS	SHEET 8 OF 13

LOREN COOK CO.
MANUFACTURERS OF AIR MOVING EQUIPMENT
SPRINGFIELD, MISSOURI

DO NOT SCALE DRAWING
TOLERANCES UNLESS OTHERWISE NOTED

DECIMAL
.XX = ± .063"
.XXX = ± .010"
.XXXX = ± .001"

FRACTIONAL
≤12" = ± 1/16"
>12" THRU 96" = ± 1/8"
>96 THRU 144" = ± 1/4"
>144" = ± 3/8"

ANGULAR
± 2°

(NC) = NO INSPECTION REQ'D

DRUM EXTENSION
FOR TCNHBLE
SIZES 100-300

SIZE	DRAWING NO.	REV.
B	SD140723-05	B

PRODUCT REVISED
as complying with the Florida Building Code
NOA-No. 24-0311.08
Expiration Date 03/12/2025
By
Miami-Dade Product Control

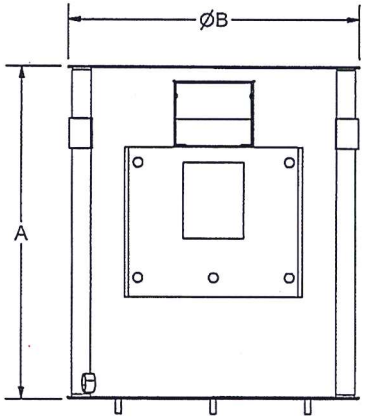

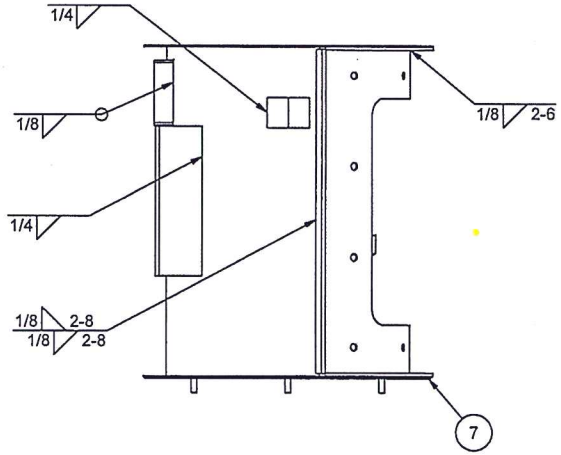

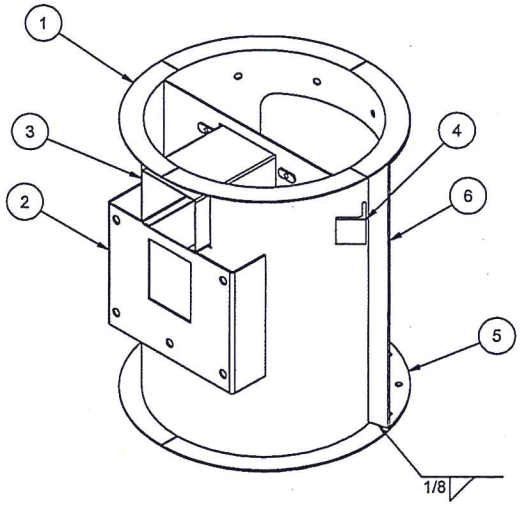

210	34 5/8	37 3/16
195	33 3/8	34 3/16
180	31 1/8	31 3/16
165	28 5/8	29 3/16
150	27 1/8	27 3/16
135	24 5/8	24 3/16
120	23 1/8	21 3/16
100	22 1/16	19 3/16
UNIT SIZE	A DIM	B DIM

NOTES:
1. THIS SHEET IS FOR HOUSING WELDMENT SIZES 100-210. FOR HOUSING WELDMENT 225-300 SEE SHEET 10.

PRODUCT RENEWED
as complying with the Florida Building Code
NOA-No. 25-0102.07
Expiration Date: 03/12/2030
By: Manuel Perez
Miami-Dade Product Control

JERRY TRAVIS MILLER ENGINEER
FLORIDA LICENSE #89825
FLORIDA STATE CERTIFICATE OF AUTHORITY #PY34356
JERRY TRAVIS MILLER No. 89825 STATE OF FLORIDA PROFESSIONAL ENGINEER
2/10/24

CARBON STEEL: SY MIN=50KSI

ITEM	SHT #	DESCRIPTION	MATERIAL SPEC
7		INLET PANEL SIZES 120-210	12 GA STEEL
7	-	INLET PANEL SIZE 100	14 GA STEEL
6	-	STIFFENER, ACCESS DOOR	1/4" STEEL
5	-	FLANGE SECTION	1/4 STEEL
4	-	LIFTING LUG ANGLE	1/4 STEEL
3		BELT TUNNEL SIZES 165-210	12 GA STEEL
3	-	BELT TUNNEL SIZES 100-150	14 GA STEEL
2	-	MOTOR MOUNT BRACKET	10 GA STEEL
1	-	HOUSING WITH ACCESS	12 GA STEEL

MAT'L	-	
DRAWN	JWA	7/22/2014
DESIGNER	BFS	SHEET 9 OF 13

LOREN COOK CO.
MANUFACTURERS OF AIR MOVING EQUIPMENT
SPRINGFIELD, MISSOURI

DO NOT SCALE DRAWING
TOLERANCES UNLESS OTHERWISE NOTED

DECIMAL
.XX = ± .063"
.XXX = ± .010"
.XXXX = ± .001"

FRACTIONAL
≤12" = ± 1/16"
>12" THRU 96" = ± 1/8"
>96 THRU 144" = ± 1/4"
>144" = ± 3/8"

ANGULAR
± 2°

(NC) = NO INSPECTION REQ'D

HOUSING WELDMENT
FOR TCNHBLE
SIZES 100-210

SIZE	DRAWING NO.	REV.
B	SD140723-05	B

PRODUCT REVISED
as complying with the Florida Building Code
NOA-No. 24-0311.08
Expiration Date 03/12/2025
By
Miami-Dade Product Control

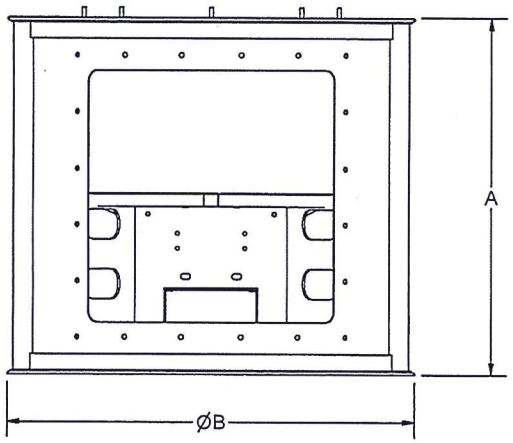

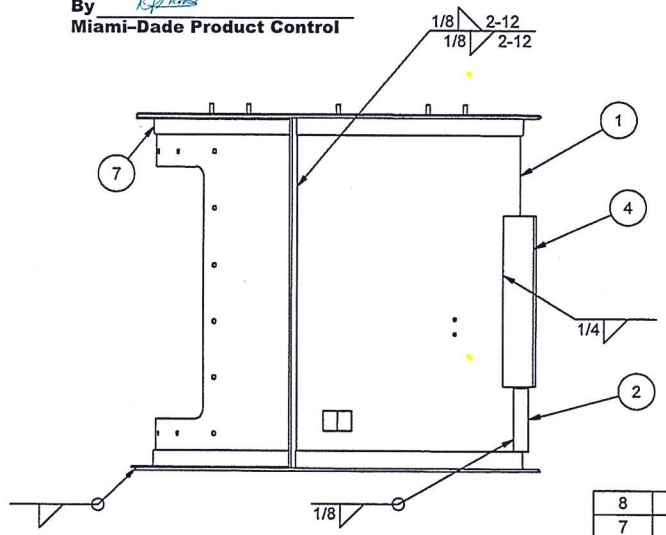

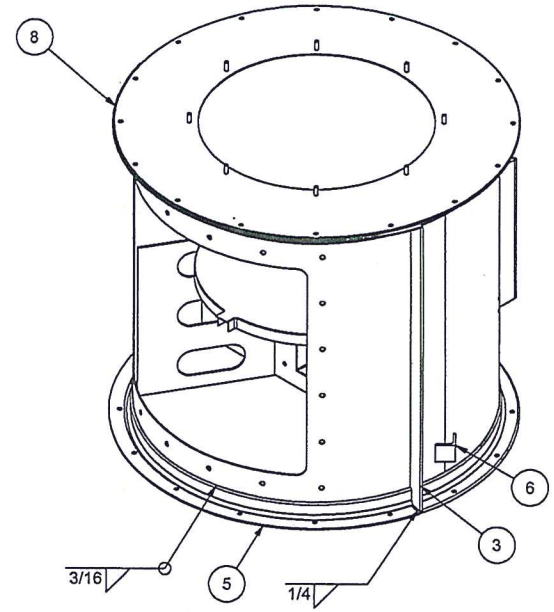

CARBON STEEL: SY MIN=50KSI

ITEM	SHT #	DESCRIPTION	MATERIAL SPEC
8	-	INLET PANEL	12 GA STEEL
7	-	OUTER HOUSING RING	1/4 STEEL
6	-	LIFTING LUG ANGLE	1/4 STEEL
5	-	FLANGE SECTION	1/4 STEEL
4	SHT 11	MOTOR PLATE WELDMENT	-
3	-	STIFFENER, ACCESS DOOR	1/4 STEEL
2	-	BELT TUNNEL	12 GA STEEL
1	-	HOUSING WITH ACCESS	10 GA STEEL

NOTES:
1. THIS SHEET IS FOR HOUSING WELDMENT SIZES 225-300.
FOR HOUSING WELDMENT 100-210 SEE SHEET 9.

300	48 3/8	52 1/4
270	46 5/8	48 1/4
245	41 1/8	44 1/4
225	35 5/8	40 1/4
UNIT SIZE	A DIM	B DIM

PRODUCT RENEWED
as complying with the Florida Building Code
NOA-No. 25-0102.07
Expiration Date: 03/12/2030
By: Manuel Perez
Miami-Dade Product Control

JERRY TRAVIS MILLER-ENGINEER
FLORIDA LICENSE #89925
FLORIDA STATE CERTIFICATE OF AUTHORITY #P134388
JERRY TRAVIS MILLER
No 89925
STATE OF FLORIDA
PROFESSIONAL ENGINEER
2/18/25

MAT'L			
DRAWN	JWA	7/22/2014	
DESIGNER	BFS	SHEET 10 OF 13	

LOREN COOK CO.
MANUFACTURERS OF AIR MOVING EQUIPMENT
SPRINGFIELD, MISSOURI

DO NOT SCALE DRAWING
TOLERANCES UNLESS OTHERWISE NOTED

DECIMAL
.XX = ± .063"
.XXX = ± .010"
.XXXX = ± .001"

FRACTIONAL
≤12" = ± 1/16"
>12" THRU 96" = ± 1/8"
>96 THRU 144" = ± 1/4"
>144" = ± 3/8"

ANGULAR
± 2°

(NC) = NO INSPECTION REQ'D

HOUSING WELDMENT
FOR TCNHBLE
SIZES 225-300

SIZE	DRAWING NO.	REV.
B	SD140723-05	B

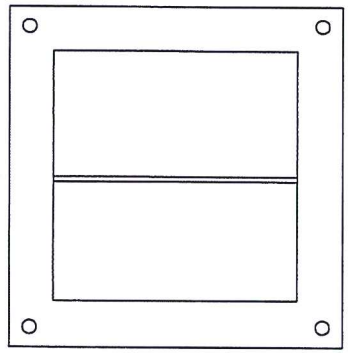

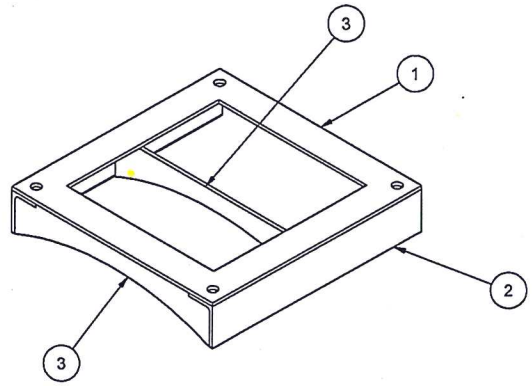

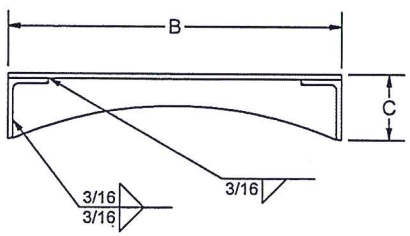

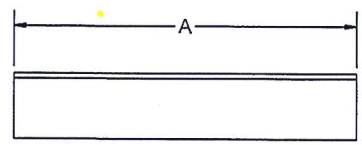

PRODUCT REVISED
as complying with the Florida Building Code
NOA-No. 24-0311.08
Expiration Date 03/12/2025
By
Miami-Dade Product Control

CARBON STEEL: SY MIN=50KSI

ITEM	SHT #	DESCRIPTION	MATERIAL SPEC
3	-	SUPPORT GUSSET	1/4 STEEL
2	-	MOTOR RAIL	1/4 STEEL
1	-	MOTOR MOUNT PLATE	1/4 STEEL

MAT'L			
DRAWN	JWA	7/22/2014	
DESIGNER	BFS	SHEET 11 OF 13	

LOREN COOK CO.
MANUFACTURERS OF AIR MOVING EQUIPMENT
SPRINGFIELD, MISSOURI

DO NOT SCALE DRAWING
TOLERANCES UNLESS OTHERWISE NOTED

DECIMAL
.XX = ± .063"
.XXX = ± .010"
.XXXX = ± .001"

FRACTIONAL
±12" = ± 1/16"
>12" THRU 96" = ± 1/8"
>96 THRU 144" = ± 1/4"
>144" = ± 3/8"

ANGULAR
± 2°

(NC) = NO INSPECTION REQ'D

MOTOR MOUNT WELDMENT
FOR TCNHBLE
SIZES 100-300

SIZE	DRAWING NO.	REV.
B	SD140723-05	B

UNIT	A	B	C
SIZE	DIM	DIM	DIM
300	18 3/4	19 1/2	3 3/4
270	18 3/4	19 1/2	3 3/4
245	17	16 1/2	3 1/4
225	17	16 1/2	3 1/4

PRODUCT RENEWED
as complying with the Florida Building Code
NOA-No. 25-0102.07
Expiration Date: 03/12/2030
By: Manuel Perez
Miami-Dade Product Control

JERRY TRAVIS MILLER- ENGINEER
FLORIDA LICENSE #88925
FLORIDA STATE CERTIFICATE OF AUTHORITY #27343388
JERRY TRAVIS MILLER
No 88925
STATE OF
FLORIDA
PROFESSIONAL ENGINEER
2/18/27

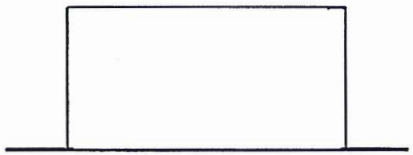

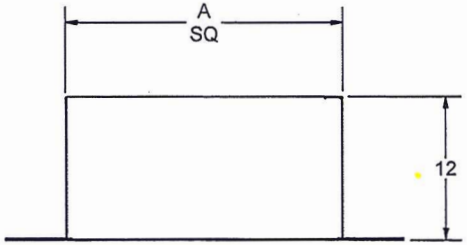

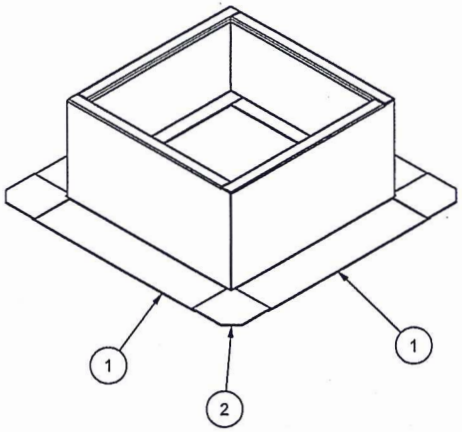

PRODUCT RENEWED
as complying with the Florida Building Code
NOA-No. 25-0102.07
Expiration Date: 03/12/2030
By: Manuel Perez
Miami-Dade Product Control

300	58 7/8	297
270	52 7/8	266
245	48 7/8	246
225	46 7/8	235
210	42 7/8	215
195	40 7/8	205
180	36 7/8	184
165	33	164
150	31	154
135	29	144
120	27 1/16	134
100	23 1/16	113
UNIT	A	WEIGHT
SIZE	DIM	IN LBS

PRODUCT REVISED
as complying with the Florida Building Code
NOA-No. 24-0311.08
Expiration Date 03/12/2025
By
Miami-Dade Product Control

JERRY TRAVIS MILLER- ENGINEER
FLORIDA LICENSE #89925
FLORIDA STATE CERTIFICATE OF AUTHORITY #7734366
JERRY TRAVIS MILLER
No 89925
STATE OF FLORIDA
PROFESSIONAL ENGINEER

2	-	LEC CORNER FLANGE	7 GA STEEL
1	-	LEC SIDE PANEL	7 GA STEEL
ITEM	SHT #	DESCRIPTION	MATERIAL SPEC

MAT'L		
DRAWN	JWA	7/22/2014
DESIGNER	BFS	SHEET 12 OF 13

DO NOT SCALE DRAWING
TOLERANCES UNLESS OTHERWISE NOTED

DECIMAL	FRACTIONAL
.XX = ± .063"	≤12" = ± 1/16"
.XXX = ± .010"	>12" THRU 96" = ± 1/8"
.XXXX = ± .001"	>96 THRU 144" = ± 1/4"
	>144" = ± 3/8"
ANGULAR ± 2°	(NC) = NO INSPECTION REQ'D

LOREN COOK CO.
MANUFACTURERS OF AIR MOVING EQUIPMENT
SPRINGFIELD, MISSOURI

1 X 1 CURB
FOR TCNHBLE
SIZES 100-300

SIZE	DRAWING NO.	REV.
B	SD140723-05	B

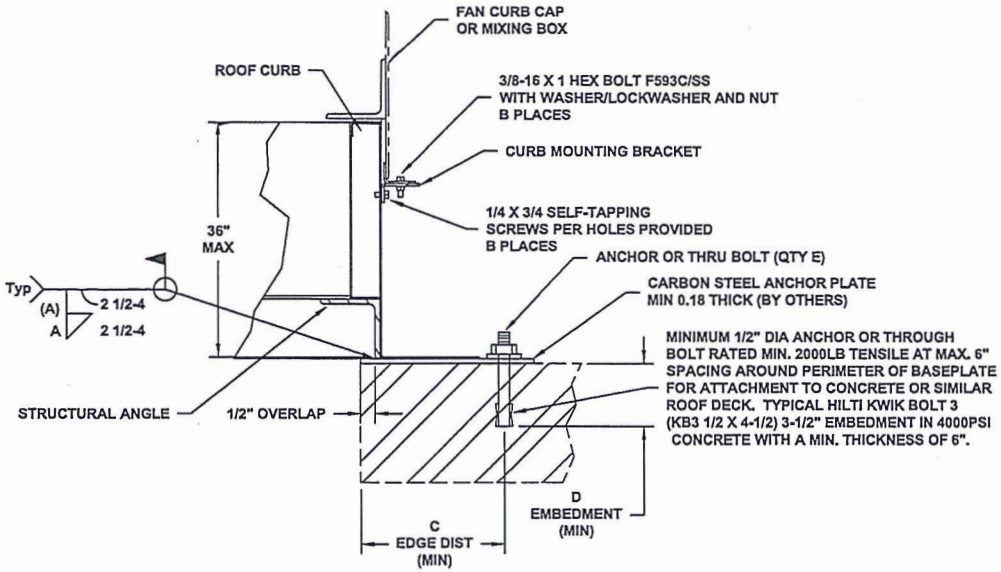

ALTERNATE LECT CURB ATTACHMENT
(WELD CURB TO ANCHOR PLATE)
ATTACH ANCHOR PLATE TO ROOF STRUCTURE
WITH MECHANICAL FASTENERS

245 thru 300	1/4	56	28	42	6	3.5
100 thru 225	1/4	40	20	30	6	3.5
UNIT	A	LESS BOX	SINGLE BOX	DUAL BOX	C	D
SIZE	DIM	B PLACES	B PLACES	B PLACES	DIM	DIM

CURB ANCHORAGE MECHANICAL FASTENER MINIMUM QUANTITY (E)				
300	12	23	12	23
270	11	21	11	21
245	11	20	11	20
225	10	19	10	19
210	10	18	10	18
195	9	17	9	17
180	9	16	9	16
165	8	14	8	14
150	8	14	8	14
135	7	13	7	13
120	7	12	7	12
100	6	11	6	11
UNIT SIZE	LESS BOX/ SINGLE AND SHORT SIDE DUAL BOX QUANTITY E	LONG SIDE OF DUAL BOX QUANTITY E	TOTAL PERIMETER FASTENERS FOR LESS BOX AND SINGLE QUANTITY E	TOTAL PERIMETER DUAL BOX QUANTITY E

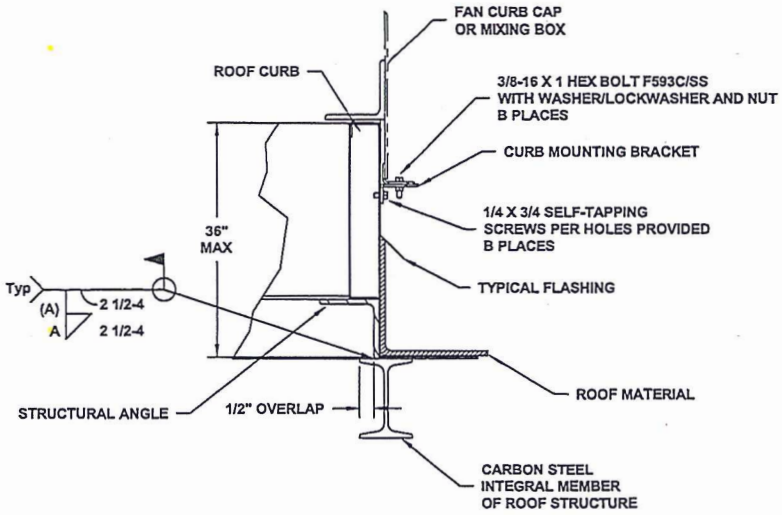

STANDARD LECT CURB ATTACHMENT
(WELD CURB TO ROOF STRUCTURE)

245 thru 300	1/4	56	28	42
100 thru 225	1/4	40	20	30
UNIT	A	LESS BOX	SINGLE BOX	DUAL BOX
SIZE	DIM	B PLACES	B PLACES	B PLACES

PRODUCT REVISED
as complying with the Florida Building Code
NOA-No. 24-0311.08
Expiration Date 03/12/2025
By
Miami-Dade Product Control

PRODUCT RENEWED
as complying with the Florida Building Code
NOA-No. 25-0102.07
Expiration Date: 03/12/2030
By: Manuel Perez
Miami-Dade Product Control

JERRY TRAVIS MILLER- ENGINEER
FLORIDA LICENSE #66805
FLORIDA STATE CERTIFICATE
OF AUTHORITY #PY34368
JERRY TRAVIS MILLER
No 66805
STATE OF
FLORIDA
PROFESSIONAL ENGINEER
2/6/24

MAT'L	–	
DRAWN	BFS	07/23/14
DESIGNER	BFS	SHEET 13 OF 13

DO NOT SCALE DRAWING
TOLERANCES UNLESS OTHERWISE NOTED

DECIMAL	FRACTIONAL
.XX=±.053"	≤12"=±1/16"
.XXX=±.010"	>12" THRU 96"=±1/8"
.XXXX=±.001"	>96" THRU 144"=±1/4"
ANGULAR ±2°	>144"=±3/8"
	(NC)=NO INSPECTION REQ'D

LOREN COOK CO.
MANUFACTURERS OF AIR MOVING EQUIPMENT
SPRINGFIELD, MISSOURI

MOUNTING DETAIL
FOR TCNHBLE
SIZES 100–300

SIZE	DRAWING NO.	REV.
B	SD140723–05	B